AirToolPro.com by Zampini Industrial Group - Premier Tool Suppliers Since 1987 1-800-353-4676

Desoutter TM

Desoutter Limited. HP2 7DR. UK.

05

GB Servicing Instructions
Parts List
Operating Instructions

D Wartungsanleitung
Teileliste
Bedienungsanleitung

F Manuel d'entretien
Liste de pièces
Manuel d'utilisation

E Instrucciones de Servicio
Listas de Repuestos
Instrucciones de Operación

P Instruções de Manutenção
Listas de Peças
Instruções de Funcionamento

I Istruzioni per la Manutenzione
Elenco delle Parti
Istruzioni Operative

GR Οδηγίες Συντήρησης
Κατάλογοι Ανταλλαχτιχών
Οδηγίες Λειτουργιάς

NL Onderhoudsinstructies
Onderdelenlijst
Bedieningsinstructies

DK Servicevejledning
Liste over dele
Betjeningsvejledning

N Serviceinstruksjoner
Delelister
Driftsinstruksjoner

S Serviceinstruktioner
Reservdelslista
Bruksanvisning

FIN Huolto-ohjeet
Osaluettelo
Käyttöohjeet

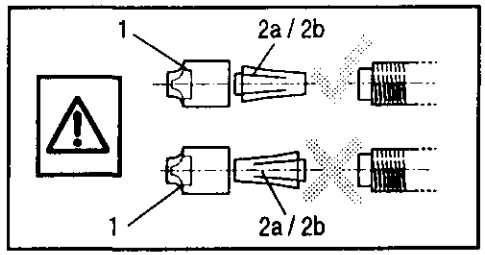

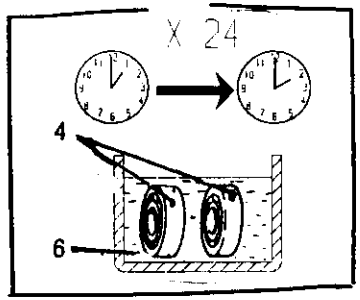

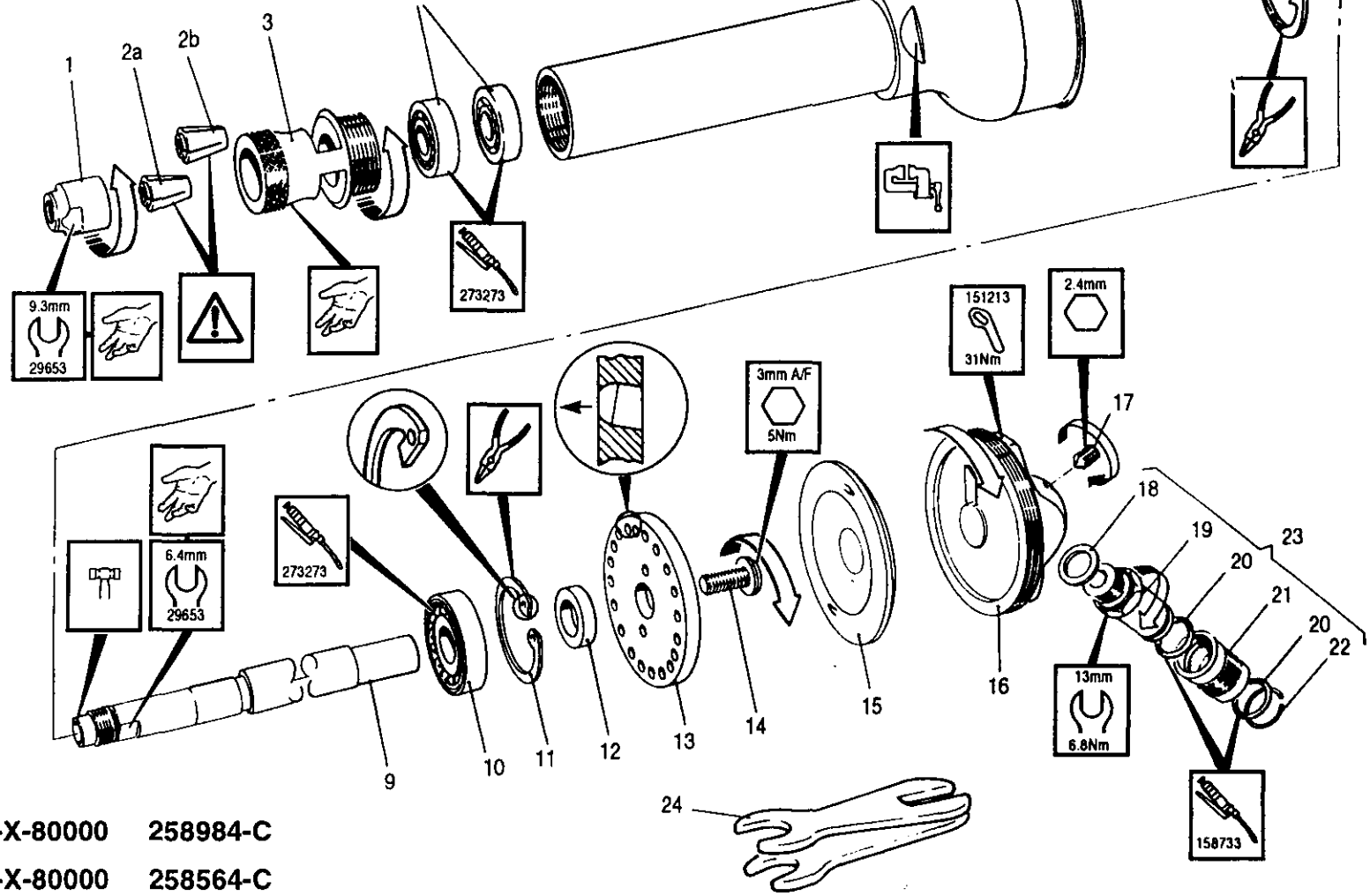

05-X-80000 258984-C
05-X-80000 258564-C

AirToolPro.com by Zampini Industrial Group - Premier Tool Suppliers Since 1987 1-800-353-4676

Desoutter™

Desoutter Limited

Item Ps. Nr. No. Article	Part No Teil Nr. Référence	Qty Menge Qté	Item Ps. Nr. No. Article	Part No Teil Nr. Référence	Qty Menge Qt
258984			**258564**		
1	29623	1	1	29623	1
2a	9812-3mm	1	2a	9812-3mm	1
2b	9782 1/8"	1	2b	9782 1/8"	1
3	239683	1	3	239683	1
*4	239713	2	*4	239713	2
5	318773	1	5	318773	1
6	27652	1	6	363363	1
			7	54853	2
*8	239733	1	*8	239733	1
9	239673	1	9	239673	1
*10	89833	1	*10	89833	1
*11	239743	1	*11	239743	1
12	239703	1	12	239703	1
13	79863	1	13	79863	1
14	236943	1	14	236943	1
15	79893	1	15	79893	1
16	90533	1	16	90533	1
17	156763	1	17	156763	1
*18	44513	1	*18	44513	1
19	68923	1	19	68923	1
*20	43463	2	*20	43463	2
21	68933	1	21	68933	1
*22	68943	1	*22	68943	1
23	68913	1	23	68913	1
24	29653	2	24	29653	2
			-	75922	1
			-	25602	1
			-	38522	1
			-	38542	1
			-	38562	1
			-	38582	1
			-	38632	1

Service Kits
Service-Ausrüstungen
Trousses d'Entretien

Part no Teil Nr. Référence	Item Ps. Nr. No. Article	Qty Menge Qté
367273	4	2
	10	1
367283	8	1
	11	1
	18	1
	20	1
	22	1

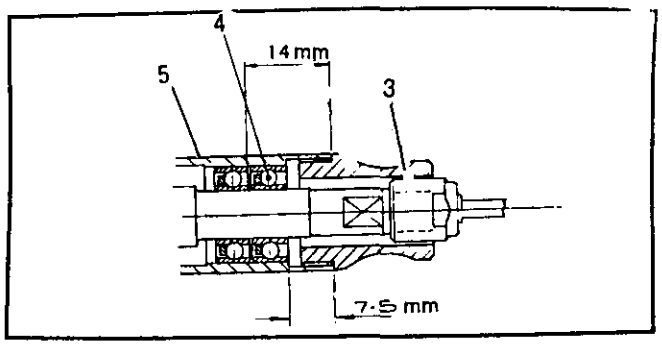

GB * Indicates normal replacement items. It is recommended that adequate stocks are held for servicing requirements.
Always quote tool model number, serial number and spare part number when ordering spares.

D * Bedeutet normale Verschleißteile. Es empfiehlt sich eine angemessene Menge für Wartungszwecke auf Lager zu halten.
Bei der Bestullung von Ersatzteilen, bitte immer angeben: Typennummer der Bohrmaschine, Werknummer und Ersatzteilnummer.

F * Le symbole astérisque (*) indique des articles de rechange normaux. Il est recommandé d'en conserver des stocks suffisants pour assurer toutes les opérations d'entretien courant.
Lors de la commande de pièces de rechange, toujours citer le numéro de modèle de l'outillage, son numéro de série et le numéro de référence de chaque pièce de rechange.

E * Indica elementos de reposición regular. Se recomienda tener una cantidad adecuada de los mismos en reserva a efectos de mantenimiento.
Al encargar piezas de recambio, siempre debe indicarse el número de modelo de la herramienta, su número de serie y el número de la pieza de recambio.

P * Indica itens que são substituidos regularmente. É recomendado que estoques adequados sejam mantidos para requisitos de manutenção.
Cite sempre o número do modêlo da ferramenta, número de série, e número da peça accesória quando pedindo acessórios.

I * L'asterisco denota recambi normali. Si consiglia di mantenere scorte adeguate alle esigenze della manutenzione.
Nell'ordinazione di ricambi citare il numero di modello dell'utensile, il numero di matricola e quello di catalogo del pezzo.

GR * Σημαίνει συνηθισμένα είδη (τεμάχια) για αντικατάσταση. Σας συνιστύμε να τηρείτε αρκετό απόθεμα από τα είδη που χρειάζονται αντικατάσταση.
Οταν παραγγέλνετε ανταλλακτικά πάντα να γράφετε τον αριθμό μοντέλου του εργαλείου, τον αριθμό σειράς και τον αριθμό ανταλλακτικού

NL * Betekent normale reserveartikelen. Het verdient aanbeveling om voldoende voor onderhoudsbehoeften vooradig te hebben.
Bij bestelling van reserveonderdelen geef altijd modelnummer, volgnummer en reserveonderdeelnummer van het werktuig op.

DK * Indikerer normale udskiftningsemner. Det anbefales at have rigelige forsyninger af dele til brug i forbindelse med eftersyn.
Opgiv altid det korrekte værktøjsmodelnummer, serienummer og reservedelsnummer ved bestilling af reservedele.

N * Angir normale reservedeler. Det anbefales at tilstrekkelig antall reservedeler holdes på lager.
Ved bestilling av deler må man alltid oppgi verktøyets modellnr., serienr. og reservedelens nr.

S * Utmärker normala reservdelar. Vi rekommenderar att tillräckligt antal lagras för serviceändamål.
Uppge alltid verktygets modellnummer, serienummer samt reservdelens nummer vid beställning av reservdelar.

FIN * Viittaa tavallisiin varaosiin. Suosittelemme, että riittäviä määriä pidetään varastossa huoltotarpeita varten.
Työkalun mallinumero, sarjanumero ja varasosan numero on aina mainittava tilattaessa.

AirToolPro.com by Zampini Industrial Group - Premier Tool Suppliers Since 1987 1-800-353-4676

Desoutter™

Desoutter Limited

STATEMENT OF USE

This product is designed for the removal of material by use of abrasives and cutters.

GENERAL

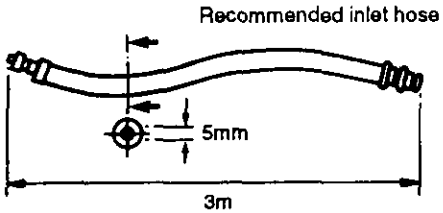

Lubrication

Correct lubrication is vital for the maximum performance of the tool and an airline lubricator should be fitted in the system down line of the filter. Use ISO VG 15.

158733	= Molycote PG75	273283	= BP FG00EP
208893	= Rocol M204G	27662(5L)	= ISO VG 15
273273	= BP Q5618	27652(250 ml)	= ISO VG 15

DATA

Maximum air pressure Pmax	= 6.3 bar
Minimum air pressure Pmin	= 2.0 bar
Sound Pressure Level (dBA)	= 76 ± 2 re. CAGI-PNEUROP Test code
Vibration Level (m/sec)	= 2.7 re.ISO 8662
Weight	= 0.3 kg.

Accessories

A range of accessories are available and a suitable item should be chosen from the Desoutter accessories catalogue.

WARNING

BEFORE OPERATING THIS TOOL, READ AND UNDERSTAND COLLET GRINDER SAFETY INSTRUCTIONS PART NO. 354393

OPERATING INSTRUCTIONS

1. Allow the tool to run up to its maximum speed before applying to the workpiece.
2. It is not recommended that wheels or points are used with more than 13mm of spindle overhang.
3. Ensure valve (23) is in closed position before connecting to air supply.
4. Beware of tool running on for some time after air is switched off.

MAINTENANCE INSTRUCTIONS

1. Service should be carried out at intervals of 1000 hours' use.
2. All torque figures ± 10%.
3. Replace as necessary all 'O' rings, bearings and rotor blades. See service kits.
4. When disposing of components, lubricants, etc ... ensure that the relevant safety procedures are carried out.
5. ◐ Indicates direction of dismantling.
6. Torque values stated are for assembly.

©Copyright 1997, Desoutter, HP2 7DR, UK.
All rights reserved. Any unauthorized use or copying of the contents or part thereof is prohibited. This applies in particular to trademarks, model denominations, part numbers and drawings.
Use only authorized parts. Any damage or malfunction caused by the use of unauthorized parts is not covered by Warranty or Product Liability.