AirToolPro.com by Zampini Industrial Group - Premier Tool Suppliers Since 1987 1-800-353-4676

Desoutter™

Desoutter Limited.HP2 7DR. UK.

ADJUSTABLE CENTRE MULTI-SPINDLE HEAD 2/18-88

OPERATING INSTRUCTIONS

SERVICING INSTRUCTIONS

PARTS LIST

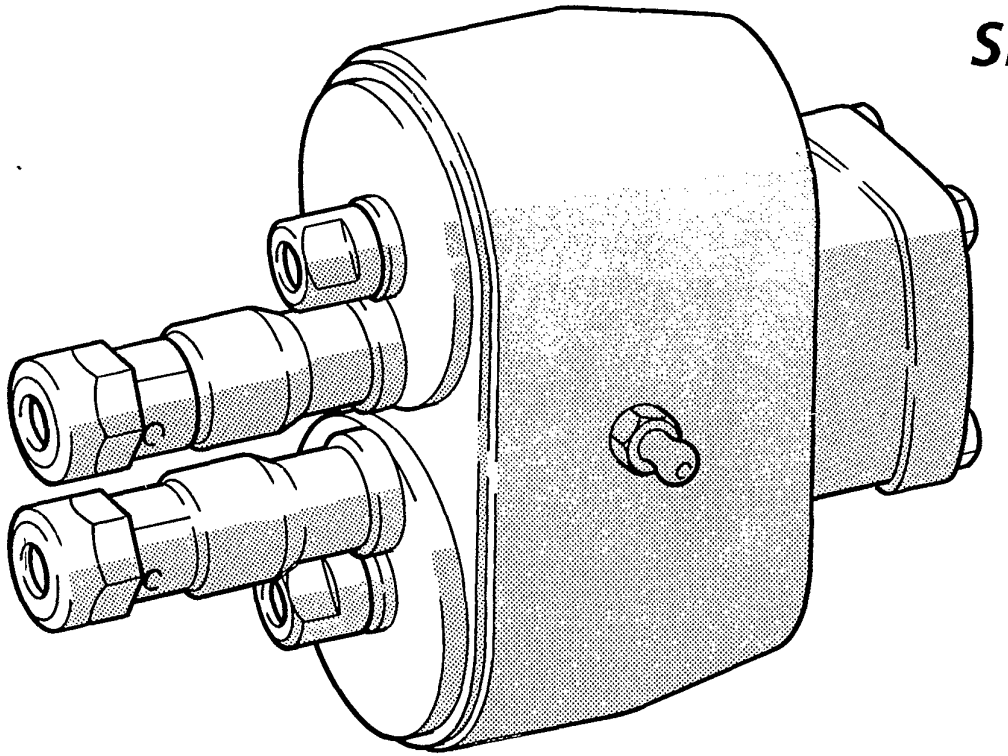

AirToolPro.com by Zampini Industrial Group - Premier Tool Suppliers Since 1987 1-800-353-4676

Desoutter

ADJUSTABLE CENTRE MULTI-SPINDLE HEAD 2/18-88

- Servicing Instructions
- (GB) Parts List
- Operating Instructions
- Wartungsanleitung
- (D) Teileliste
- Bedienungsanleitung
- Manuel d'entretien
- (F) Liste de pièces
- Manuel d'utilisation
- Instructions de Servicio
- (E) Liste de Piezas
- Instrucciones de Operación
- Instruções de Manutenção
- (P) Listas de Peças
- Instruções de Funcionamento
- Instruzioni per la
- (I) Manutenzione
- Elenco delle Parti
- Instuzioni Operative
- *Οδηγίες Συντήρησης*
- (GR) *Κατάλογοι Ανταλλακτικών Μέρω*
- *Οδηγίες Λειτουργιάς*
- Onderhoudsinstructies
- (NL) Onderdelenlijst
- Bedieningsinstructies
- Servicevejledning
- (DK) Liste over dele
- Betjeningsvejledning
- Serviceinstruktioner
- (N) Delelister
- Driftsinstruksjoner
- Serviceinstruktioner
- (S) Reservdelslista
- Bruksanvisning
- Huolto-ohjeet
- (FIN) Osaluettelo
- Käyttöohjeet

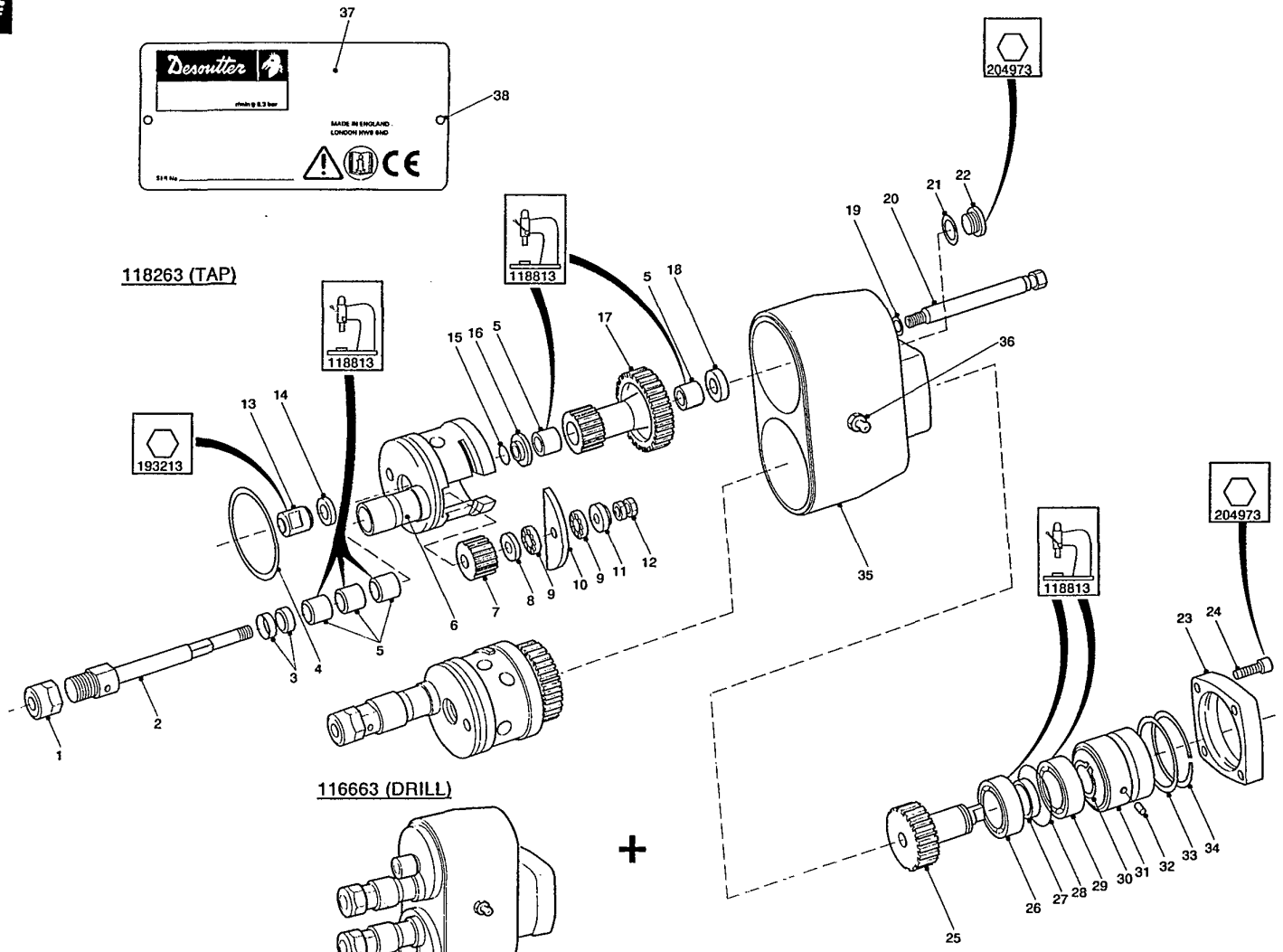

52682-C
52351-C
H6-92162-C **J06-104062-C** **53342-C**
H13-92232-C **J13-104122-C** **52362-C**

AirToolPro.com by Zampini Industrial Group - Premier Tool Suppliers Since 1987 1-800-353-4676

Desoutter

Item No. Listen-Nr. No.	Part No. Teile-Nr. Pièce No.	Description	Qty Menge Qte
1	116803	Nut	2
2	116733	Spindle	2
3	116723	Ring	4
*4	116813	'O' Ring	2
*5	116713	Bearing	10
6	116703	Turret	2
7	116743	Pinion	2
8	116753	Washer	2
*9	116763	Bearing	4
10	116773	Plate	2
11	116783	Collar	2
12	116793	Locknut	4
13	116893	Nut	2
14	116883	Washer	2
*15	203713	'O' Ring	2
16	117743	Washer	2
17	116833	Gear	2
18	116873	Washer	2
*19	110783	'O' Ring	2
*20	117073	Washer	1
21	117733	Plug	1
22	116853	Spindle	2
23	117043	Ring	1
24	117183	Screw	4
25	116943	Pinion	1
*26	116953	Bearing	1
27	116963	Spacer	1
*28	200763	'O' Ring	1
29	370733	Bearing	1
30	116983	Circlip	1
31	116993	Sleeve	1
32	117013	Pin	1
33	225553	'O' Ring	1
34	117023	Ring	1
35	116673	Housing	1
36	365193	Nipple	1
37	363373	Nameplate	1
38	54853	Screw	2

* Indicates normal replacement items. It is recommended that adequate stocks are held for servicing requirements.

Always quote tool model number, serial number and spare part number when ordering spares.

* Bedeutet normale Verschleißteile. Es empfiehlt sich eine angemessene Menge für Wartungszwecke auf Lager zu halten.

Bei der Bestellung von Ersatzteilen, bitte immer angeben: Typennummer der Bohrmaschine, Werknummer und Ersatzteilnummer.

* Le symbole astérisque (*) indique des articles de rechange normaux. Il est recommandé d'en conserver des stocks suffisants pour assurer toutes les opérations d'entretien courant.

Lors de la commande de pièces de rechange, toujours citer le numéro de modèle de l'outillage, son numéro de série et le numéro de référence de chaque pièce de rechange.

* Indica elementos de reposición regular. Se recomienda tener una cantidad adecuada de los mismos en reserva a efectos de mantenimiento.

Al encargar piezas de recambio, siempre debe indicarse el número de modelo de la herramienta, su número de serie y el número de la pieza de recambio.

* Indica itens que são substituidos regularmente. É recomendado que estoques adequados sejam mantidos para requisitos de manutenção.

Cite sempre o número do modêlo da ferramenta, número de série, e número da peça accesória quando pedindo acessórios.

* L'asterisco denota ricambi normali. Si consiglia di mantenere scorte adeguate alle esigenze della manutenzione.

Nell'ordinazione di ricambi citare il numero di modello dell'utensile, il numero di matricola e quello di catalogo del pezzo.

* Σημαίνει συνηθισμένα είδη (τεμάχια) για αντικατάσταση. Σας συνιστούμε να τηρείτε αρκετό απόθεμα από τα είδη που χρειάζονται αντικατάσταση.

Οταν παραγγέλνετε ανταλλακτικά πάντα να γράφετε τον αριθμό μοντέλου του εργαλείου, τον αριθμό σειράς και τον αριθμό ανταλλακτικού.

* Betekent normale reserveartikelen. Het verdient aanbeveling om voldoende voor onderhoudsbehoeften voorradig te hebben.

Bij bestelling van reserveonderdelen geef altijd modelnummer, volgnummer en reserveonderdeelnummer van het werktuig op.

* Indikerer normale udskiftningsemner. Det anbefales at have rigelige forsyninger af dele til brug i forbindelse med eftersyn.

Opgiv altid det korrekte værktøjsmodelnummer, serienummer og reservedelsnummer ved bestilling af reservedele.

* Angir normale reservedeler. Det anbefales at tilstrekkelig antall reservedeler holdes på lager.

Ved bestilling av deler må man alltid oppgi verktøyets modellnr., serienr. og reservedelens nr.

* Utmärker normala reservdelar. Vi rekommenderar att tillräckligt antal lagras för serviceändamål.

Uppge alltid verktygets modellnummer, serienummer samt reservdelens nummer vid beställning av reservdelar.

* Viittaa tavallisiin varaosiin. Suosittelemme, että riittäviä määriä pidetään varastossa huoltotarpeita varten.

Työkalun mallinumero, sarjanumero ja varasosan numero on aina mainittava tilattaessa.

AirToolPro.com by Zampini Industrial Group - Premier Tool Suppliers Since 1987 1-800-353-4676

Desoutter

324073

Item No. Pos. Nr. No. Article	Part No. Teil Nr. Référence	Description	Qty Menge Qté
1	324113	Locknut	1
2	290583	Circlip	1
3	324093	Key	1
4	324103	Screw	1
5	324083	Adaptor	1
6	117143	Coupling	1
7	327973	Screw	1
8	117213	Ring	1

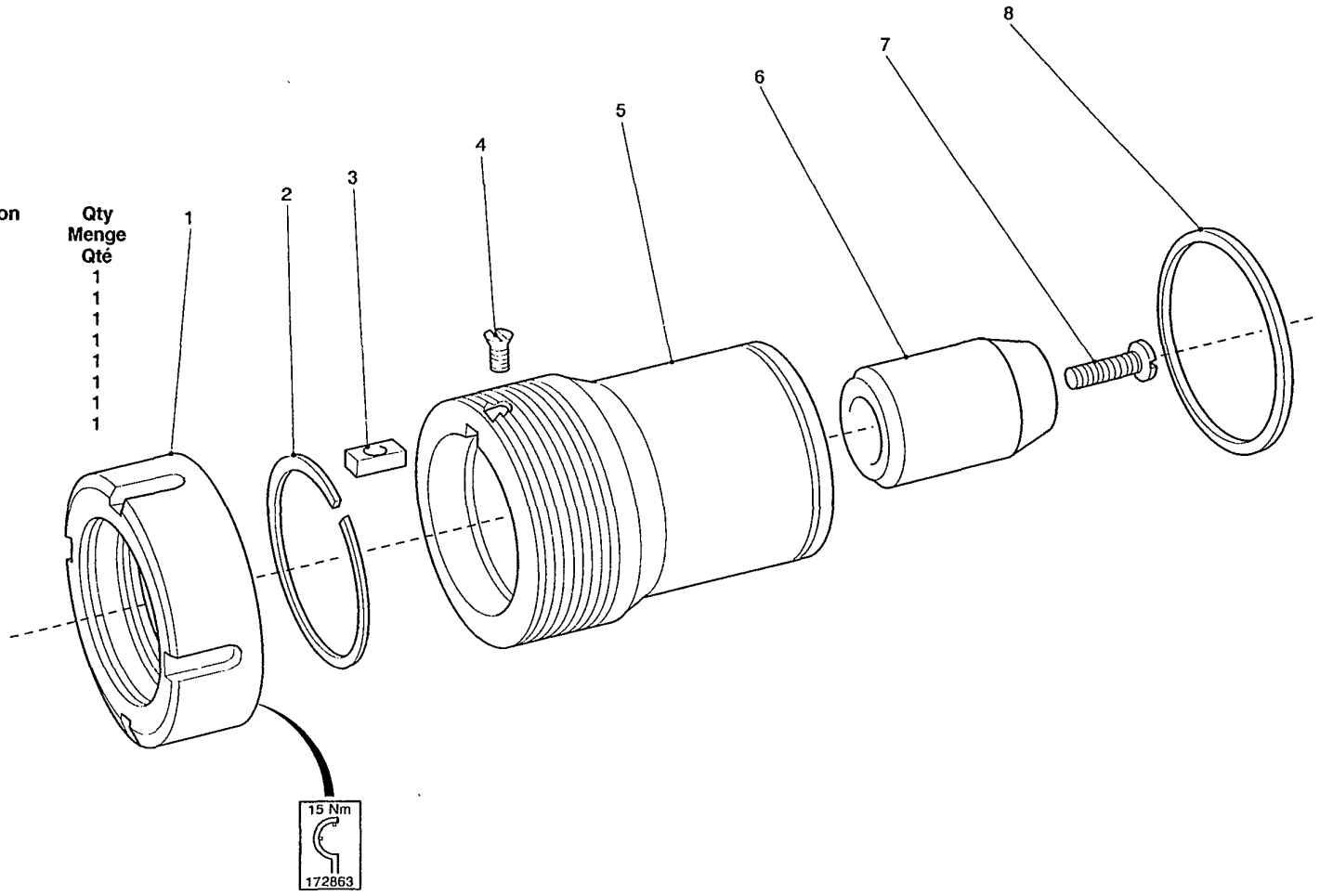

AirToolPro.com by Zampini Industrial Group - Premier Tool Suppliers Since 1987 1-800-353-4676

Desoutter

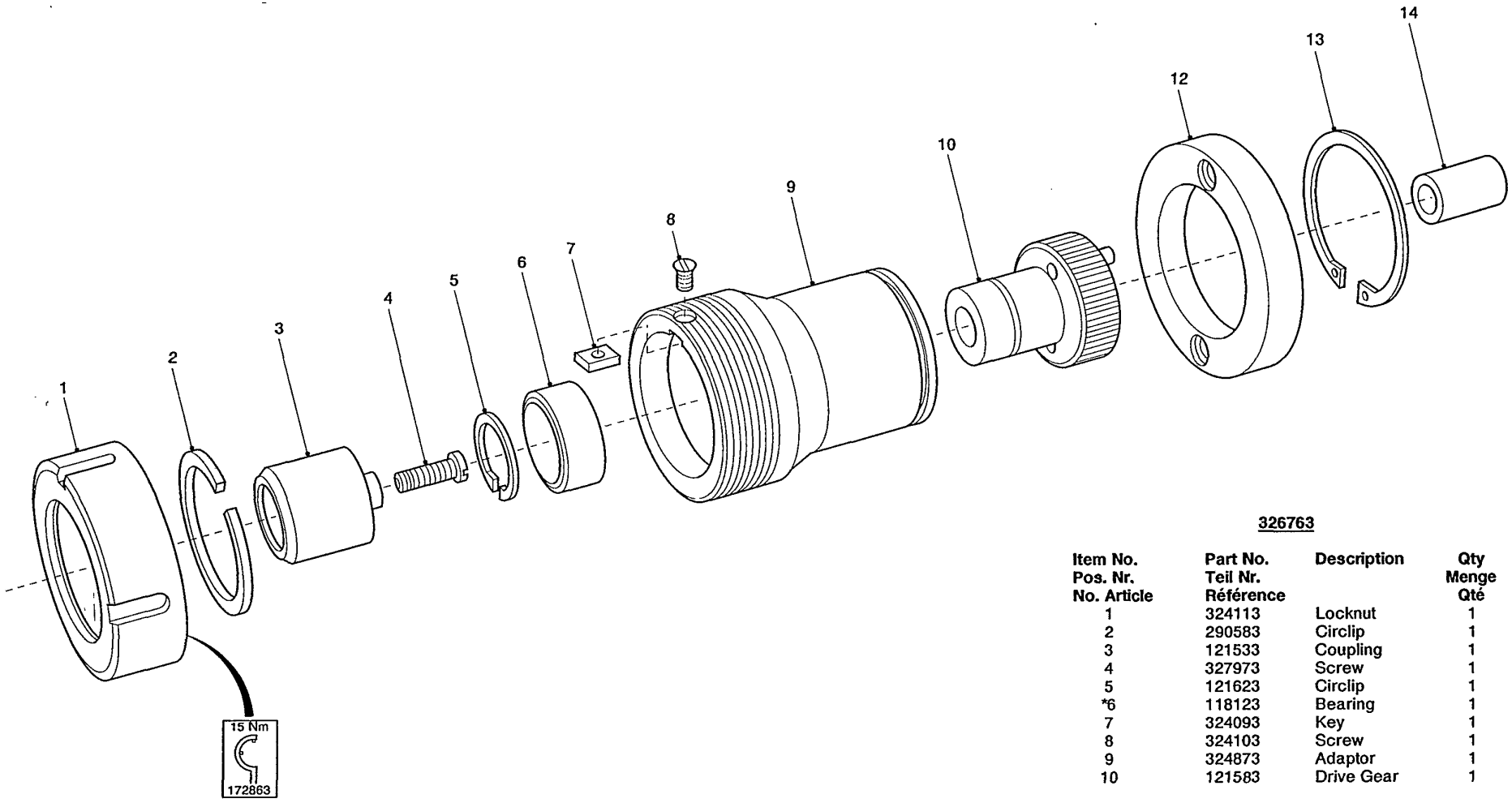

326763

Item No. Pos. Nr. No. Article	Part No. Teil Nr. Référence	Description	Qty Menge Qté
1	324113	Locknut	1
2	290583	Circlip	1
3	121533	Coupling	1
4	327973	Screw	1
5	121623	Circlip	1
*6	118123	Bearing	1
7	324093	Key	1
8	324103	Screw	1
9	324873	Adaptor	1
10	121583	Drive Gear	1
12	121763	Collar	1
13	121753	Circlip	1
14	118113	Bush	1

AirToolPro.com by Zampini Industrial Group - Premier Tool Suppliers Since 1987 1-800-353-4676

Desoutter

117233

Item No. Pos. Nr. No. Article	Part No. Teil Nr. Référence	Description	Qty Menge Qté
1	118673	Locknut	1
2	118653	Snap Ring	1
3	117143	Coupling	1
4	64888	Screw	1
5	118683	Key	2
6	118663	Screw	2
7	117133	Adaptor	1
8	117213	Snap Ring	1

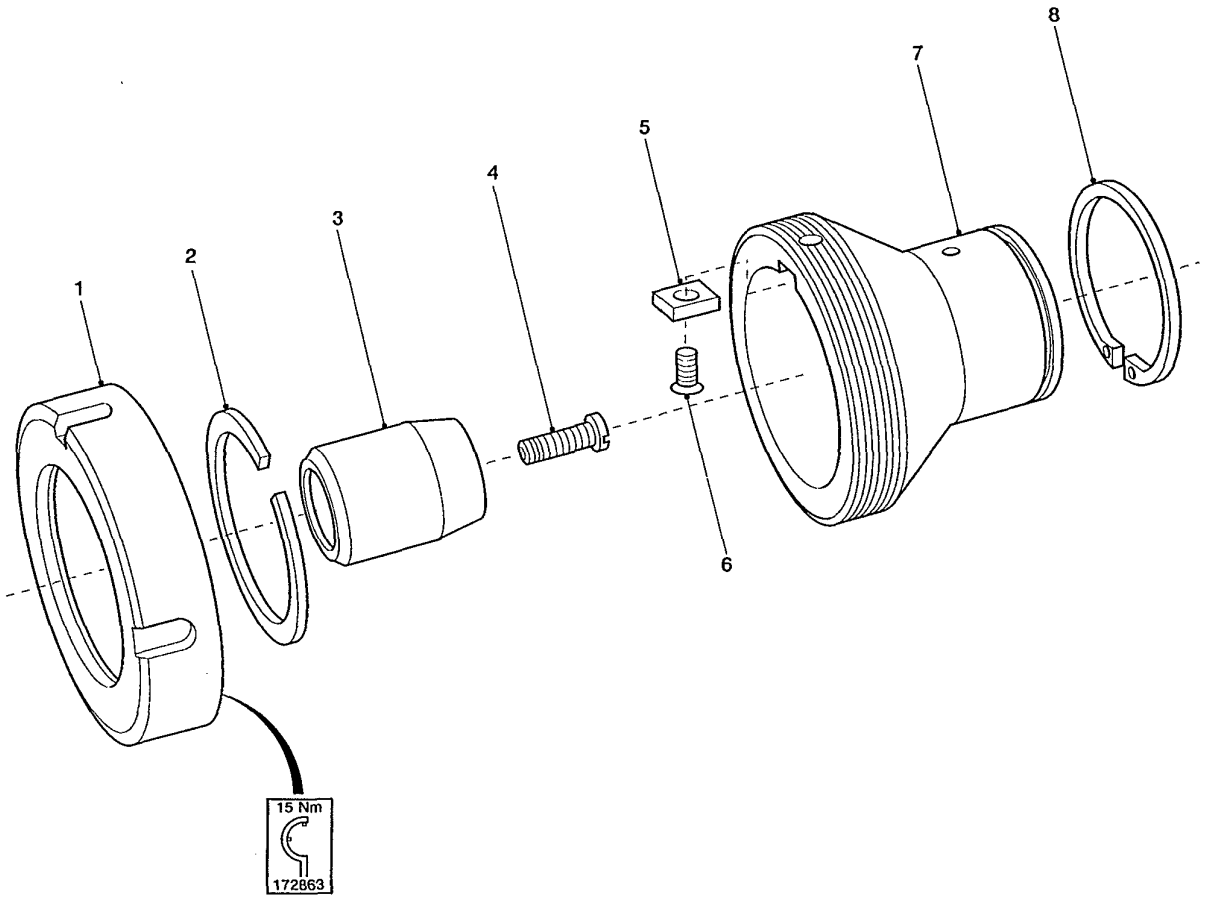

AirToolPro.com by Zampini Industrial Group - Premier Tool Suppliers Since 1987 1-800-353-4676

Desoutter

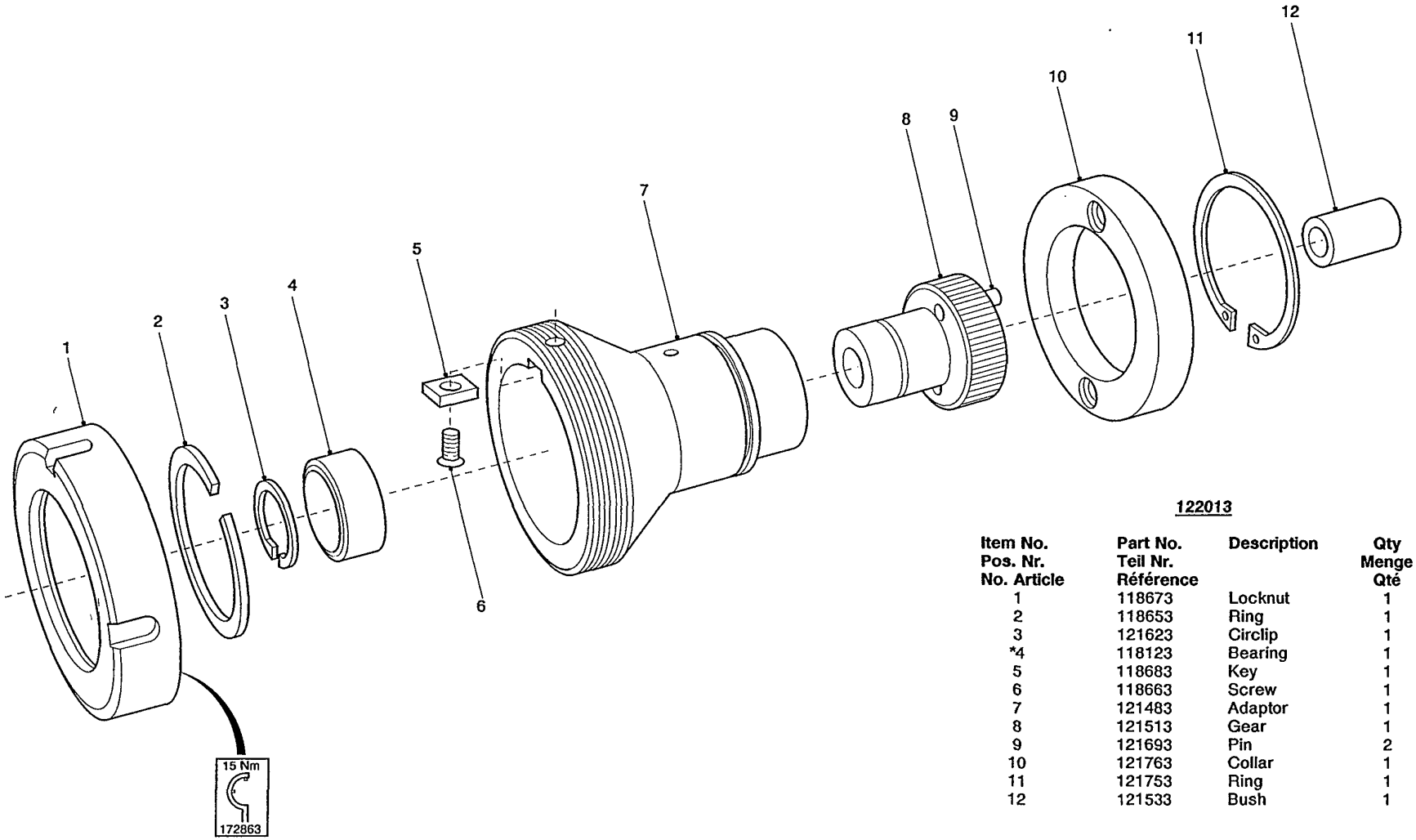

122013

Item No. Pos. Nr. No. Article	Part No. Teil Nr. Référence	Description	Qty Menge Qté
1	118673	Locknut	1
2	118653	Ring	1
3	121623	Circlip	1
*4	118123	Bearing	1
5	118683	Key	1
6	118663	Screw	1
7	121483	Adaptor	1
8	121513	Gear	1
9	121693	Pin	2
10	121763	Collar	1
11	121753	Ring	1
12	121533	Bush	1

AirToolPro.com by Zampini Industrial Group - Premier Tool Suppliers Since 1987 1-800-353-4676

Desoutter

383773

Item No. Pos. Nr. No. Article	Part No. Teil Nr. Référence	Description	Qty Menge Qté
1	383783	Locknut	1
2	384043	Circlip	1
3	117143	Coupling	1
4	327973	Screw	1
5	383793	Key	1
6	236793	Screw	1
7	383803	Adaptor	1
8	117213	Circlip	1

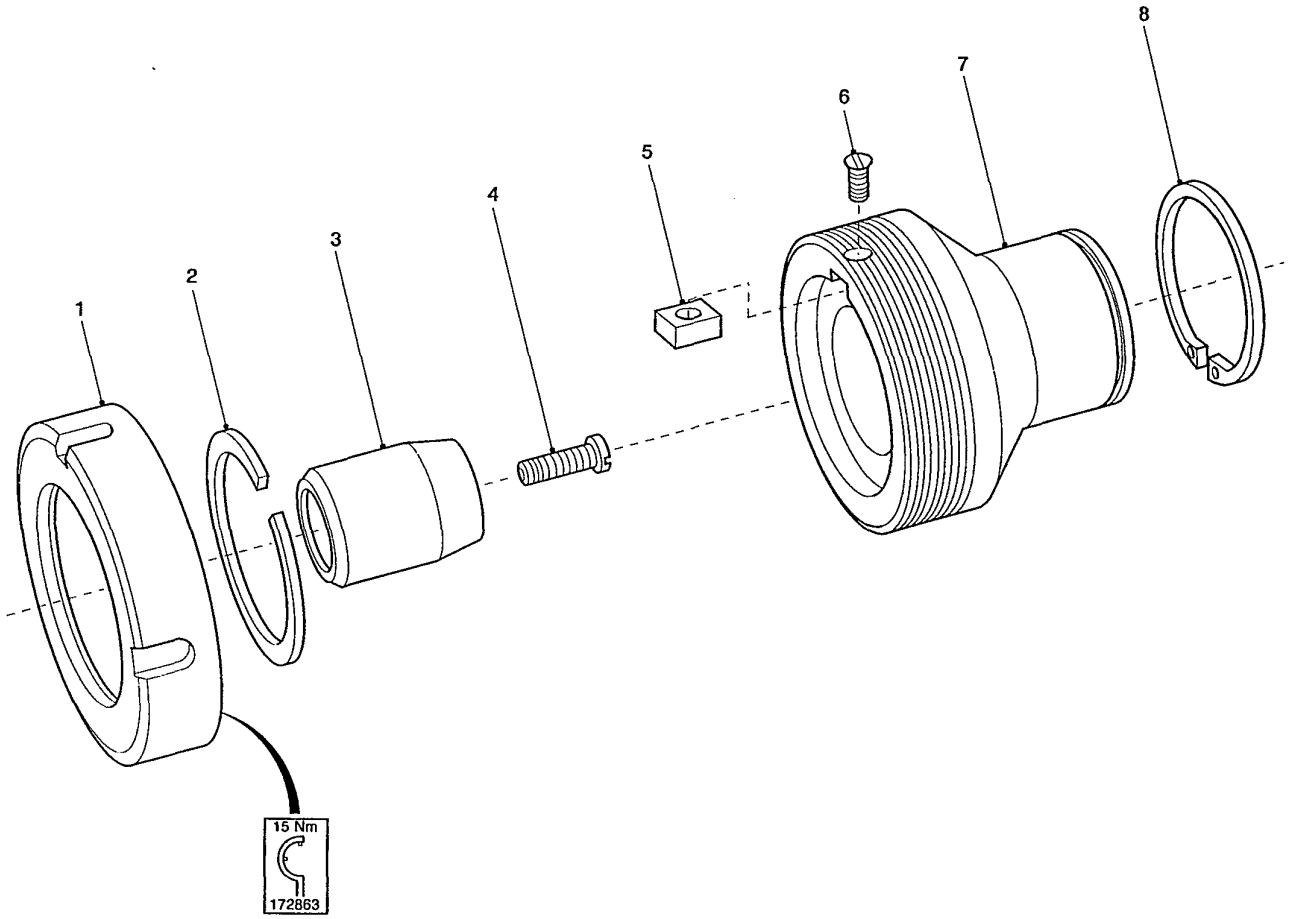

AirToolPro.com by Zampini Industrial Group - Premier Tool Suppliers Since 1987 1-800-353-4676

Desoutter

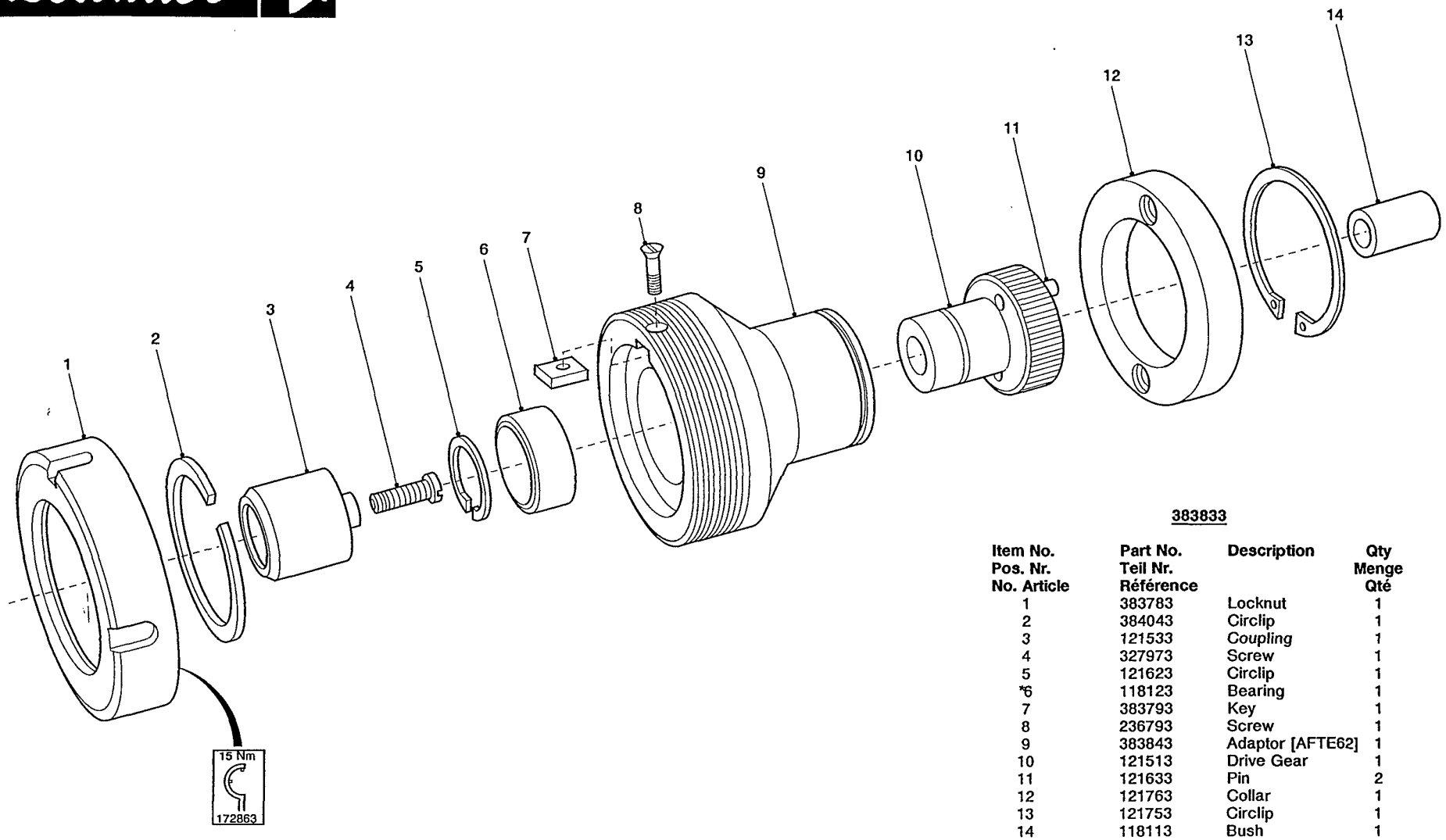

383833

Item No. Pos. Nr. No. Article	Part No. Teil Nr. Référence	Description	Qty Menge Qté
1	383783	Locknut	1
2	384043	Circlip	1
3	121533	*Coupling*	1
4	327973	Screw	1
5	121623	Circlip	1
*6	118123	Bearing	1
7	383793	Key	1
8	236793	Screw	1
9	383843	Adaptor [AFTE62]	1
10	121513	Drive Gear	1
11	121633	Pin	2
12	121763	Collar	1
13	121753	Circlip	1
14	118113	Bush	1

AirToolPro.com by Zampini Industrial Group - Premier Tool Suppliers Since 1987 1-800-353-4676

Desoutter

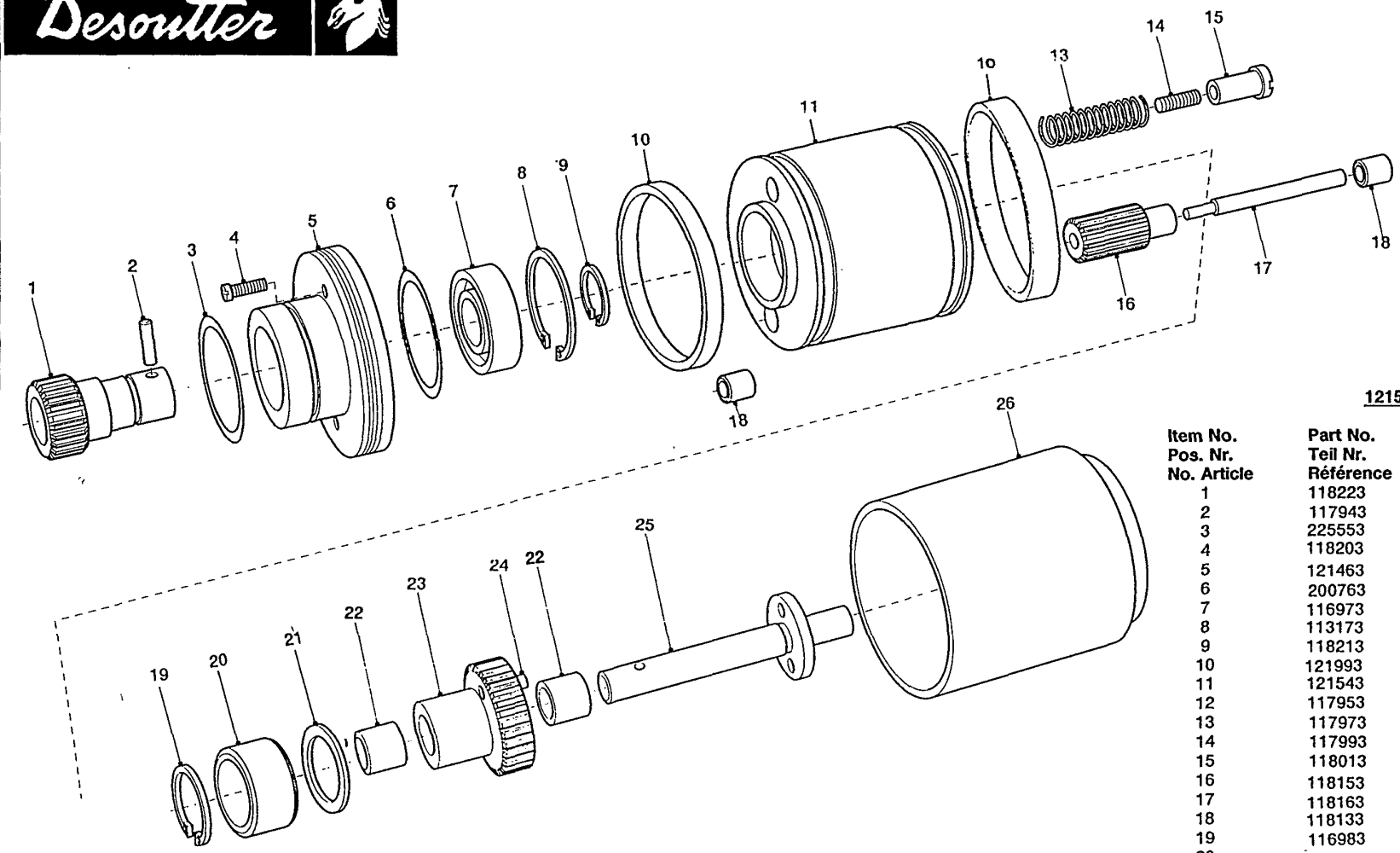

121553

Item No. Pos. Nr. No. Article	Part No. Teil Nr. Référence	Description	Qty Menge Qté
1	118223	Pinion	1
2	117943	Pin	1
3	225553	'O' Ring	1
4	118203	Screw	4
5	121463	Sleeve	1
6	200763	'O' Ring	1
7	116973	Bearing	1
8	113173	Circlip	1
9	118213	Circlip	1
10	121993	Bearing	2
11	121543	Body	1
12	117953	Ring	1
13	117973	Stud	1
14	117993	Spring	1
15	118013	Tension Adjuster	1
16	118153	Pinion	4
17	118163	Spindle Pinion	4
18	118133	Bearing	8
19	116983	Circlip	1
20	117983	Bearing	1
21	118183	Washer	1
22	118193	Bearing	2
23	121523	Drive Gear	1
24	121693	Pin	2
25	121493	Spindle	1
26	121473	Sleeve	1

AirToolPro.com by Zampini Industrial Group - Premier Tool Suppliers Since 1987 1-800-353-4676

Desoutter

Drilling Heads

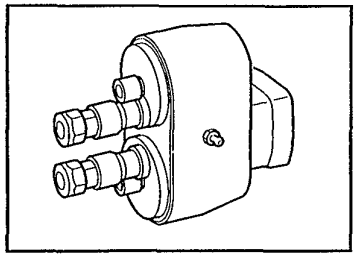

+

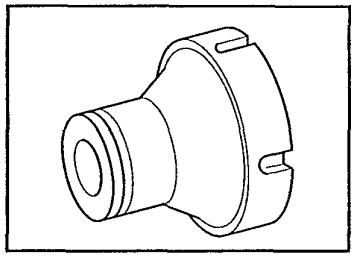

Series 40	=	116663	+	117173
Series 41	=	116663	+	324073
Series 60	=	116663	+	117233
Series 62	=	116663	+	383773

Tapping Heads

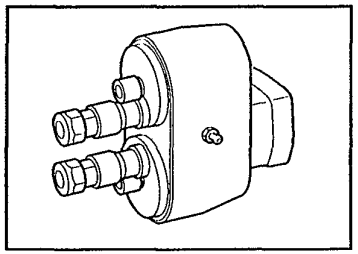

+

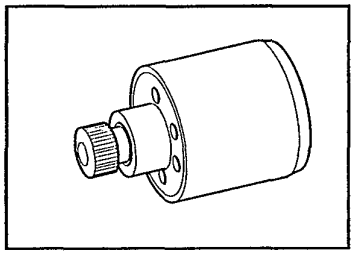

+

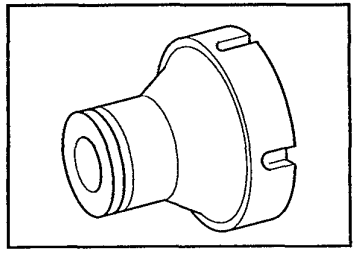

Series 40	=	118263	+	121553	+	118073
Series 41	=	118263	+	121553	+	326763
Series 60	=	118263	+	121553	+	122013
Series 62	=	118263	+	121553	+	383833

AirToolPro.com by Zampini Industrial Group - Premier Tool Suppliers Since 1987 1-800-353-4676

Desoutter

OPERATORS INSTRUCTIONS

This product is to be used solely on Desoutter Auto Feed Units with a maximum speed of 8500 rpm. Refer to the Operating Instructions of the accompanying tool before commencement of any drilling operation.

Statement of Use

This product is designed for drilling holes when using Desoutter Approved Auto Feed Units.

Data

Sound pressure level (with tool) = 75 dBA (CAGI-PNEUROP Test Code)

Weight = 2 kg

WARNING:

(1) ALWAYS DISCONNECT THE TOOL FROM THE AIR SUPPLY BEFORE ATTEMPTING ANY REPLACEMENT, ADJUSTING, SERVICING OR DISMANTLING.

(2) ENSURE THAT NO LOOSE ARTICLES OF CLOTHING OR CLEANING MATERIAL CAN BE CAUGHT BY THE ROTATING PARTS OF THE TOOL.

(3) ALWAYS ALLOW THE TOOL TO STOP BEFORE REMOVING THE WORK.

(4) ENSURE THAT THE WORK PIECE IS SECURELY CLAMPED BEFORE COMMENCEMENT OF OPERATION.

(5) ENSURE THAT THE TOOL IS SECURELY CLAMPED AROUND THE OUTER CASE BEFORE COMMENCEMENT OF OPERATION.

(6) ENSURE THAT SAFETY GUARDS ARE FITTED.

(7) BEWARE OF TOOL OUTPUT. THIS ADVANCES AND ROTATES.

(8) EYE AND EAR PROTECTION MUST BE WORN WHEN OPERATING THE TOOL.

(9) DO NOT OPERATE THE TOOL IN EXPLOSIVE ATMOSPHERES.

(10) WHEN MACHINING HAZARDOUS MATERIALS, PROVISION MUST BE MADE FOR DUST COLLECTION OR SUPPRESSION.

(11) ENSURE THAT AN EMERGENCY STOP PROVIDED FOR THE TOOL, WHETHER USED ALONE OF BUILT INTO A MACHINE.

SERVICING REQUIREMENTS

General Notes

Use the following lubricants:

Grease - Molycote G68

Cleaning

Requirements:

(1) Container to immerse components.

(2) Good quality clean paraffin.

Soak the components in the container containing the paraffin. Ensure full immersion, agitate components to ensure that air passages are flushed through. Remove components from the container, thoroughly dry and blow through air passages to remove moisture. Place components in an air tight container until required for assembly. Dispose of the dirty paraffin in accordance with health and safety regulations.

Dismantle the tool using the exploded view. Clean all components and inspect for wear or damage, exchange if necessary. Apply new lubricant to the relevant parts in accordance with list. Assemble the tool using the exploded view.

Torque values given are ± 5%.

Special tools shown in exploded view are in addition to normal workshop tools.

NOTE: Protective gloves and eye protection should be worn during cleaning of parts. Eating or smoking is prohibited when cleaning, dismantling or assembling tool.

Worn components should be carefully handled and disposed of safety.

© Copyright 1995, Desoutter, London NW9 6ND, UK.
All rights reserved
Any unauthorized use or copying of the contents or part thereof is prohibited. This applies in particular to trademarks, model denominations, part numbers and drawings.

Use only authorized parts. Any damage or malfunction caused by the use of unauthorized parts is not covered by Warranty or Product Liability.