Post-it® Fax Note 7671	Date 1/24/02	# of pages ▸ 4
To Lou Z.	From	
Co./Dept	Co	
Phone #	Phone #	
Fax # 401-679-0165	Fax #	

Desoutter D Series

Pistol Grip Screwdrivers and Nutrunners

Operating Instructions
Servicing Instructions
Parts List

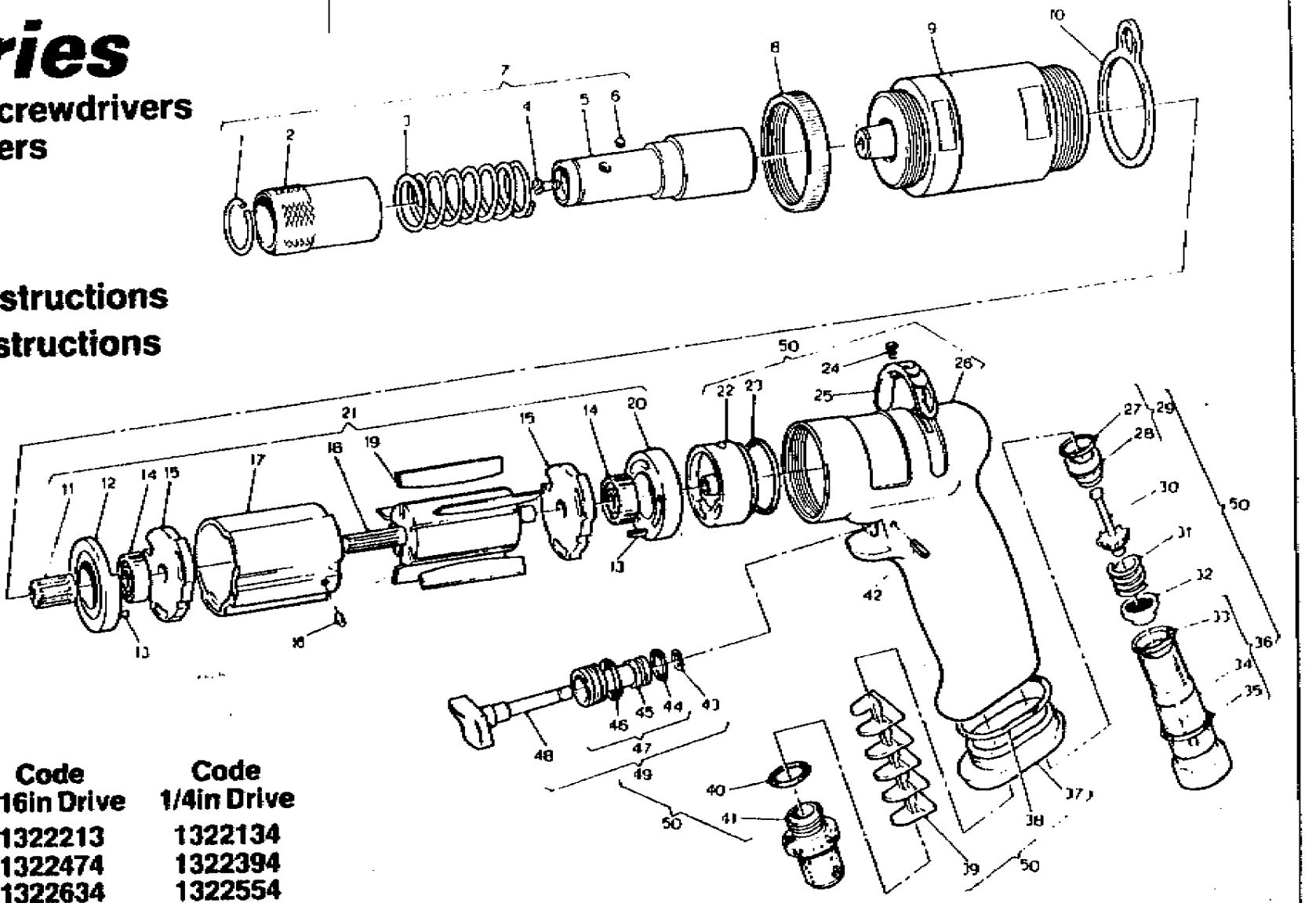

Types	Code 5/16in Drive	Code 1/4in Drive
2D8-P3-2200	1322213	1322134
2D8-P3-1400	1322474	1322394
2D8-P3-850	1322634	1322554
2D8-P3-600	1322894	1322714

1-800-353-4676 by Zampini Industrial Group - Premier Tool Suppliers Since 1987
AirToolPro.com

AirToolPro.com by Zampini Industrial Group - Premier Tool Suppliers Since 1987 1-800-353-4676

te the rotor blades (19) and lubricate, place the front g plate (15) in position, with grooves to rotor. Place this sembly, gear end of rotor uppermost, onto a fixture which r only on the rotor rear spigot. Align the location slots in aring plates with the pin holes in the cylinder and push on g (14). Press home until the bearing bottoms on the front g plate BUT do not pre-load the bearing. Locate the rear g housing, with its spring pin, onto the motor then press on the front bearing housing making sure that the spring pins are correctly located. Check for free rotation of the rotor.

Final Assembly

Enter the motor complete (21) into the pistol grip body (28), taking care that the rear bearing housing (20) remains in position and the motor is located by the motor alignment pin (16).

Engage the gearbox (9) with the rotor (18) and screw into position, before final tightening check that the drive is free to rotate.

Replace the bit holder complete (7) retaining with screw (4).

Connect the tool to the air supply and test for correct operation.

Main Assembly Parts List

Item No.	Part No.	Description	Qty
—	98223	Rotor — 850 & 600rpm	1
*19	36613	Rotor Blade	5
20	291583	Rear Bearing Housing with Pin 13	1
21	291623	Motor Complete — 2200rpm	1
—	291613	Motor Complete — 1400rpm	1
—	291643	Motor Complete — 850 & 600rpm	1
22	291533	Valve	1
*23	291553	'O' Ring	1
24	291563	Screw	1
25	291543	Valve Slide	1
26	291523	Pistol Grip	1
*27	202373	'O' Ring	1
28	500863	Valve Seat	1
29	501203	Valve Seat Assembly	1
30	501093	Valve Assembly	1
31	501103	Spring	1
32	500833	Air Strainer	1
*33	500973	'O' Ring	1
34	500353	Air Inlet Bolt — ¼in. BSP	As reqd
—	500343	Air Inlet Bolt — ¼in. NPT	As reqd
*35	99853	'O' Ring	1
36	501193	Air Inlet Bolt Assembly — ¼in. BSP	As reqd
—	501213	Air Inlet Bolt Assembly — ¼in. NPT	As reqd
37	501383	Exhaust Cap	1
*38	52563	'O' Ring	1
39	501683	Exhaust Helix	1
*40	40533	'O' Ring	1
41	256433	Silencer — Sintered	1
*42	500913	Spring Pin	1
*43	500783	Circlip	1
*44	500953	'O' Ring	1
*45	500963	'O' Ring	1
46	500383	Valve Body	1
47	501173	Valve Body Assembly	1
48	501873	Valve Stem/Button Assembly	1
49	501963	Valve Assembly	1
50	291503	Pistol Grip Complete ¼in. BSP	As reqd
—	291513	Pistol Grip Complete ¼in. NPT	As reqd

* Indicates normal replacement items. It is recommended that adequate stocks are held for servicing requirements.

Always quote model number, serial number and spare part numbers when ordering spares.

Item No.	Part No.	Description	Qty.
1	98033	Circlip	1
2	95013	Sleeve	1
3	95003	Spring	1
4	84883	Screw	1
5	95023	Bit Holder — ¼in. Hex.	1
6	95103	Bit Holder — 5/16in. Hex	1
7	95043	Ball — for ¼in. Hex	1
8	80283	Ball — for 5/16in. Hex.	1
9	31102	Bit Holder Complete — ¼in. Hex.	1
10	27742	Bit Holder Complete — 5/16in. Hex	1
11	291763	Thread Protecting Ring	1
12	See later section	Gearbox	1
13	61413	Suspension Ring	1
14	85373	Pinion — 850 & 600rpm	1
15	254893	Front Bearing Housing	1
16	256123	Spring Pin	2
17	33430	Bearing	2
18	254873	Bearing Plate	2
19	291603	Motor Alignment Pin	1
20	291593	Cylinder with Pin 16	1
21	257063	Rotor — 2200rpm	1
22	36663	Rotor — 1400rpm	1

Customer Notes

AirToolPro.com by Zampini Industrial Group - Premier Tool Suppliers Since 1987 1-800-353-4676

Gear Boxes and Parts List

No.	Part No.	Description	Qty.
01	291773	Gear & Nose — 2200rpm	1
—	274090	Gear & Nose — 1400rpm	1
—	274100	Gear & Nose — 850 & 600rpm	1
02	291783	Clamp Sleeve — 2200rpm	1
—	291663	Clamp Sleeve — 1400rpm	1
—	291863	Clamp Sleeve — 850 & 600rpm	1
03	157513	Collar	1
04	178543	Bearing	1
05	25563	Circlip	1
06	150813	Planet Wheel	2
07	502093	Needle Bearing	2
08	44453	Planet Cage	1
09	1453	Planet Pin	2
10	269383	Planet Cage Complete — 2200rpm	1
11	63323	Circlip	1
12	502093	Needle Bearing	4
13	238343	Spacer	2

Item No.	Part No.	Description	Qty.
114	238713	Planet Wheel	2
115	94963	Planet Cage	1
*116	41693	Planet Pin	2
117	94973	Planet Cage Complete — 1400rpm	1
*118	25573	Circlip — 850rpm	1
—	17423	Circlip — 600rpm	1
119	65383	Planet Wheel — 850rpm	2
—	36703	Planet Wheel — 600rpm	2
*120	502093	Needle Bearing	2
121	44473	Planet Cage — 850rpm	1
—	70713	Planet Cage — 600rpm	1
*122	1453	Planet Pin	2
123	44483	Planet Cage Complete — 850rpm	1
—	70703	Planet Cage Complete — 600rpm	1
*124	2413	Bearing	1
125	37623	Washer	1
*126	2423	Bearing	1

Item No.	Part No.	Description	Qty.
127	38713	Gear Ring	1
*128	25563	Circlip — 850rpm	1
—	25573	Circlip — 600rpm	1
*129	502093	Needle Bearing	2
130	65383	Planet Wheel — 850 & 600rpm	2
131	83123	Planet Cage — 850rpm	1
—	81473	Planet Cage — 600rpm	1
*132	1453	Planet Pin	2
133	78053	Planet Cage Complete — 850rpm	1
—	81483	Planet Cage Complete — 600rpm	1
*134	2413	Bearing	1

* Indicates normal replacement items. It is recommended that adequate stocks are held for servicing requirements.

Always quote model number, serial number and spare part numbers when ordering spares.

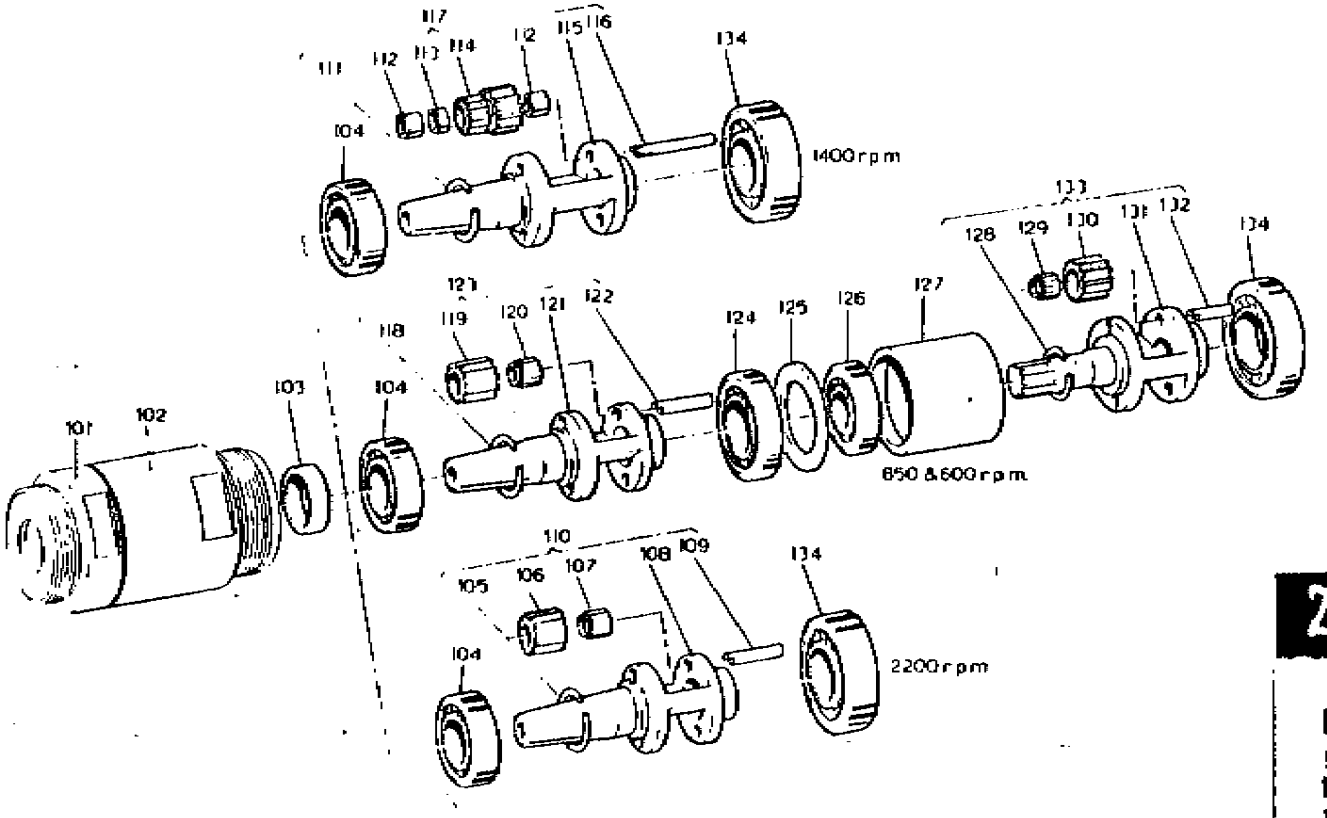

Desoutter

Desoutter Incorporated
11845 Brookfield Ave.
Livonia, Michigan 48150
Telephone (313) 522-7010 Telex 2101

AirToolPro.com by Zampini Industrial Group - Premier Tool Suppliers Since 1987 1-800-353-4676

IREMENTS

ipply

ater free and filtered air supply is required, at a pressure of (87 lbf.in²), with a flow of 8.5 l/s (18 cu ft/min); controlled by ssure regulator selected from the Desoutter Air Line Service ment Catalogue.

cation

rect lubrication is vital for the maximum performance of the nd an airline lubricator should be fitted into the system stream of the filter.

outter recommend the use of an ISO Viscosity Classified Oil, number ISO VG 15, in the lubricator.

sories

ide range of screwdriving bits and nutrunning sockets are ible and a suitable item should be selected from the atter Accessories Catalogue.

retention of these items is by taper locked ball (quick e type) where an outer sleeve is retracted to release.

ATING

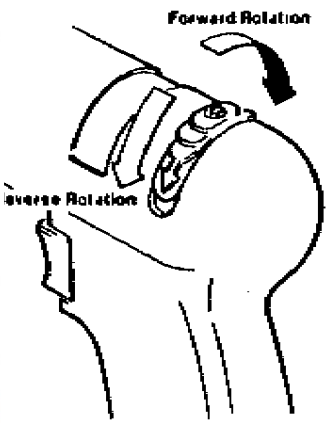

Select the required direction of rotation by positioning Valve Slide as shown.

th the correct accessory fitted into the tool connect the air ly. Hold the tool around the pistol grip and operate the button ol. The motor will run and tighten a fixing to the required e. - see Initial Setting.

WARNING

1) Always disconnect tool from the power supply before attempting any replacement, adjustment, servicing or dismantling.

2) Ensure that no loose articles of clothing or cleaning material can be caught by the rotating parts of the tool.

3) Always allow the tool to stop before removing work or resting tool

4) Ensure that work piece is securely clamped before commencement of operation — clear all loose items from vicinity.

INITIAL SETTING

When received the torque output of the tool will require setting to match the job requirement.

It is recommended that a trial tightening operation is carried out to determine the amount of adjustment required. The ideal instrument for checking the torque is an electronic peak meter (request information from Desoutter); failing this a dial indicating torque wrench is adequate.

Torque adjustment carried out by reducing the air pressure from the recommended maximum of 6 bar (87 lbf in²). As an alternative, air flow limiter can be obtained from Desoutter under part number 81223 for ¼ in. BSP and 83573 for ¼ in. NPT.

SERVICE REQUIREMENTS

General Notes

Use the following lubricants:

Oil — ISO Viscosity Classified — ISO VG15, for motors.
Grease — BP FG00-EP, for motor bearings.
Grease — Duckhams Type Q5818, for gears and other bearings.
Silicone Grease — Molykote 33, for 'O' rings.

The following tools will be required:

Spanner — 34mm	Screwdriver — No. 1 Posidrive
Spanner — 32mm	Screwdriver — Fine Blade
Spanner — 19mm	Wedge — 75938
Spanner — 16mm	

The following torque values MUST be used:

Item 4 to Item 7. 8Nm (6 lbf.ft)
Item 8 to Item 9 Hand tighten
Item 36 to Item 26: 13.5Nm (10 lbf.ft)
Item 101 to Item 102 34Nm (25 lbf.ft)
Item 102 to Item 26. 34Nm (25 lbf.ft)

Replace as necessary all 'O' rings, gaskets, bearings and rotor blades.

Bearings that have a retainer holding the balls in place must be assembled into the tool with the blank face of the retainer to the air flow, in the case of the motor the blank faces must face each other across the rotor.

The following components have left hand threads - Item 8 and the front thread of item 101. All other threads are right hand

TO DISMANTLE

Clamp the pistol grip body (26) in a soft jawed vice and remove screw (4). Using wedges release bit holder complete (7).

Unscrew the gearbox (9) from the pistol grip and pull out the motor complete (21).

Remove screw (24) and lift off valve slide (25); withdraw valve (22) with its 'O' ring (23).

Remove the pistol grip body from the vice, unscrew air inlet bolt (36) remove the exhaust cap (37) the internal components can now be withdrawn out of the base of the pistol grip

To release valve assembly (49) drive out spring pin (42) and pull the valve stem/button assembly (48).

The remainder of the dismantling follow normal engineering practice with reference to the illustration.

TO ASSEMBLE

Sub-Assemblies

Using the illustration as a guide assemble the pistol grip, and if dismantled the planet cages.

The following instructions for the motor complete (21) must be followed.

Take the rotor (18) and place the rear bearing plate (15), with grooves to rotor, into position. Press bearing (14) onto the rotor so that there is a 0.038mm (0.0015in.) gap between the rotor and the rear bearing plate. Holding the rotor and rear bearing plate assembly with the gear end of the rotor uppermost, slide the cylinder (17) over the rotor

NOTE: The cylinder must be located with the motor alignment pin (16) based to the rear bearing plate.