AirToolPro.com by Zampini Industrial Group - Premier Tool Suppliers Since 1987 1-800-353-4676

Desoutter

Desoutter Limited. London NW9 6ND

2DM6

GB Servicing Instructions
Parts List
Operating Instructions

D Wartungsanleitung
Teileliste
Bedienungsanleitung

F Manuel d'entretien
Liste de pièces
Manuel d'utilisation

E Instrucciones de Servicio
Listas de Repuestos
Instrucciones de Operación

P Instruções de Manutenção
Listas de Peças
Instruções de Funcionamento

I Istruzioni per la Manutenzione
Elenco delle Parti
Istruzioni Operative

GR Οδηγίες Συντήρησης
Κατάλογοι Ανταλλακτικών Μερών
Οδηγίες Λειτουργιάς

NL Onderhoudsinstructies
Onderdelenlijst
Bedieningsinstructies

DK Servicevejledning
Liste over dele
Betjeningsvejledning

N Serviceinstruksjoner
Delelister
Driftsinstruksjoner

S Serviceinstruktioner
Reservdelslista
Bruksanvisning

FIN Huolto-ohjeet
Osaluettelo
Käyttöohjeet

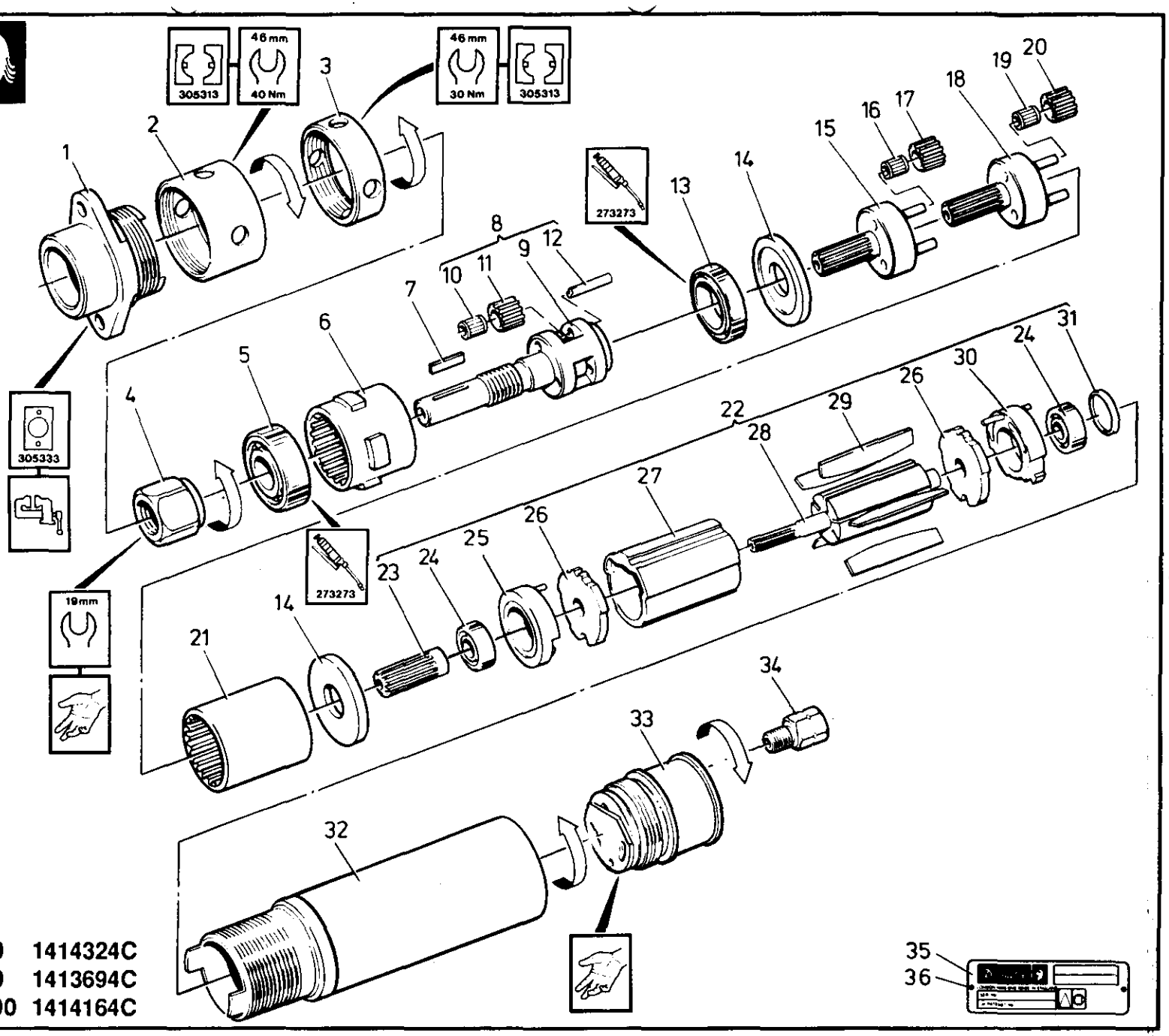

2DM6-60	1414324C	
2DM6-90	1413694C	
2DM6-290	1414164C	

AirToolPro.com by Zampini Industrial Group - Premier Tool Suppliers Since 1987 1-800-353-4676

Item Pos. Nr. No. Article	Part No Teil Nr. Référence	Qty Menge Qté
1	323083	1
2	294993	1
3	323073	1
4	323093	1
*5	251983	1
6	322843	1
7	296863	1
8	322903	1
	(60 RPM)	
	322893	1
	(90, 290 RPM)	
9	323133	1
	(60 RPM)	
	323123	1
	(90, 290 RPM)	
10	251663	3
	(60 RPM)	
	298893	3
	(90, 290 RPM)	
11	299113	3
	(60 RPM)	
	299093	3
	(90, 290 RPM)	
12	251503	3
	(60 RPM)	
	161373	3
	(90, 290 RPM)	
*13	299183	1
*14	306303	2
15	306713	1
	(60 RPM)	
	306703	1
	(90 RPM)	
	311573	1
	(290 RPM)	
*16	251663	3
	(60, 90 RPM)	
	298893	3
	(290 RPM)	
17	299113	3
	(60, 90 RPM)	
	299073	3
	(290 RPM)	
18	306673	1
	(60, 90 RPM)	
	306993	1
	(290 RPM)	
*19	251663	3
	(60, 90 RPM)	
	298893	3
	(290 RPM)	
20	299113	3
	(60, 90 RPM)	
	299093	3
	(290 RPM)	
21	306823	1
22	268593	1
	(60, 90 RPM)	
	313163	1
	(290 RPM)	
23	306543	1
	(290 RPM)	
*24	33433	2
25	304673	1
26	254873	2
27	254853	1
28	266553	1
	(60, 90 RPM)	
	306503	1
	(290 RPM)	
*29	36613	5
30	254883	1
31	254903	1
32	323013	1
33	298143	1
34	61103	3
	(1/8 NPT)	
35	355893	1
36	54853	2

Service Kits
Service Ausrüstungen
Trousses d'Entretien

Part No Teil Nr. Référence	Item Pos. Nr. No. Article	Qty Menge Qté
356673	24	2
	29	5

GB * Indicates normal replacement items. It is recommended that adequate stocks are held for servicing requirements.
Always quote tool model number, serial number and spare part number when ordering spares.

D * Bedeutet normale Verschleißteile. Es empfiehlt sich eine angemessene Menge für Wartungszwecke auf Lager zu halten.
Bei der Bestullung von Ersatzteilen, bitte immer angeben: Typennummer der Bohrmaschine, Werknummer und Ersatzteilnummer.

F * Le symbole astérisque (*) indique des articles de rechange normaux. Il est recommandé d'en conserver des stocks suffisants pour assurer toutes les opérations d'entretien courant.
Lors de la commande de pièces de rechange, toujours citer le numéro de modèle de l'outillage, son numéro de série et le numéro de référence de chaque pièce de rechange.

E * *Indica elementos de reposición regular. Se recomienda tener una* cantidad adecuada de los mismos en reserva a efectos de mantenimiento.
Al encargar piezas de recambio, siempre debe indicarse el número de modelo de la herramienta, su número de serie y el número de la pieza de *recambio.*

P * Indica itens que são substituidos regularmente. É recomendado que estoques adequados sejam mantidos para requisitos de manutenção.
Cite sempre o número do modêlo da ferramenta, número de série, e número da peça accesória quando pedindo acessórios.

I * L'asterisco denota recambi normali. Si consiglia di mantenere scorte *adeguate alle esigenze della manutenzione.*
Nell'ordinazione di ricambi citare il numero di modello dell'utensile, il numero di matricola e quello di catalogo del pezzo.

GR * Σημαίνει συνηθισμένα είδη (τεμάχια) για αντικατάσταση. Σας συνιστούμε να τηρείτε αρκετό απόθεμα από τα είδη που χρειάζονται αντικατάσταση.
Οταν παραγγέλνετε ανταλλακτικά πάντα να γράφετε τον αριθμό μοντέλου του εργαλείου, τον αριθμό σειράς και τον αριθμό ανταλλακτικού.

NL * Betekent normale reserveartikelen. Het verdient aanbeveling om voldoende voor onderhoudsbehoeften vooradig te hebben.
Bij bestelling van reserveonderdelen geef altijd modelnummer, volgnummer en reserveonderdeelnummer van het werktuig op.

DK * Indikerer normale udskiftningsemner. Det anbefales at have rigelige forsyninger af dele til brug i forbindelse med eftersyn.
Opgiv altid det korrekte værktøjsmodelnummer, serienummer og reservedelsnummer ved bestilling af reservedele.

N * Angir normale reservedeler. Det anbefales at tilstrekkelig antall reservedeler holdes på lager.
Ved bestilling av deler må man alltid oppgi verktøyets modellnr., serienr. og reservedelens nr.

S * Utmärker normala reservdelar. Vi rekommenderar att tillräckligt antal lagras för serviceändamål.
Uppge alltid verktygets modellnummer, serienummer samt reservdelens nummer vid beställning av reservdelar.

FIN * Viittaa tavallisiin varaosiin. Suosittelemme, että riittäviä määriä pidetään varastossa huoltotarpeita varten.
Työkalun mallinumero, sarjanumero ja varasosan numero on aina mainittava tilattaessa.

AirToolPro.com by Zampini Industrial Group - Premier Tool Suppliers Since 1987 1-800-353-4676

Desoutter

Desoutter Limited

STATEMENT OF USE

This motor is designed to be incorporated into a fixed or moving machine.
It can be connected for either right or left rotation or switchable between the two with suitable valving.
The motor should be mounted by the flange or threaded nose only.
The risk of the motors being the source of ignition of a potentially explosive atmosphere is extremely small.
The user is responsible for assessing the risks associated with the whole machine into which the motor is to be incorporated.

GENERAL

Recommended inlet hose

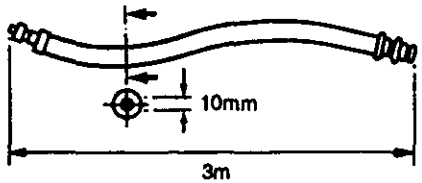

Lubrication

Correct lubrication is vital for the maximum performance of the tool and an airline lubricator should be fitted in the system down line of the filter. Use ISO VG 15.

158733	= Molycote PG75	273283	= BP FG00EP
208893	= Rocol M204G	27652	= ISO VG 15
273273	= BP Q5618		

DATA

Maximum air pressure Pmax = 6.3 bar
Minimum air pressure Pmin = 2 bar
Sound Pressure Level (dBa) = 73 re. CAGI-PNEUROP Test code
Vibration Level (m/sec²) = <2.5 re. ISO 8662

Weight

Motor type/RPM	kg
2DM6-5, 45	0.88
2DM6-60, 90, 290	0.78
2DM6-390, 620, 980, 1650	0.78
2DM6-2700, 4200, 16000	0.60
2DM6-9000	0.80

ACCESSORIES

A range of accessories are available and suitable items should be selected from the Desoutter catalogue.

MAINTENANCE INSTRUCTIONS

1. Servicing should be carried out at intervals of 1000 hours' use.
2. *All torque figures ± 10%.*
3. Replace as necessary all 'O' rings, bearings and rotor blades, see service kit.
4. Indicates direction of dismantling.
5. When disposing of components, lubricants, etc, ensure that the relevant safety procedures are carried out.

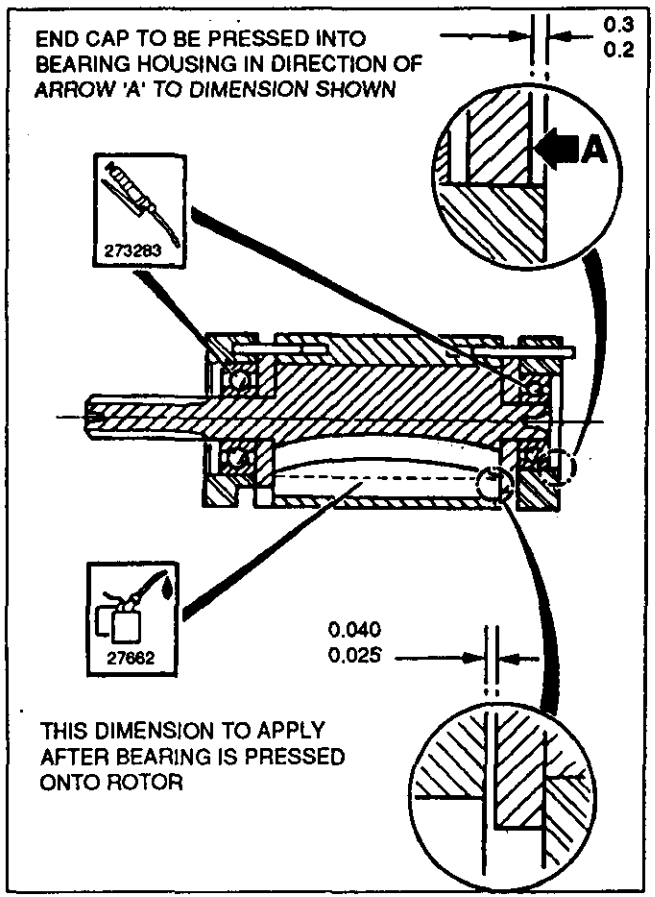

To Dismantle: refer to main illustration

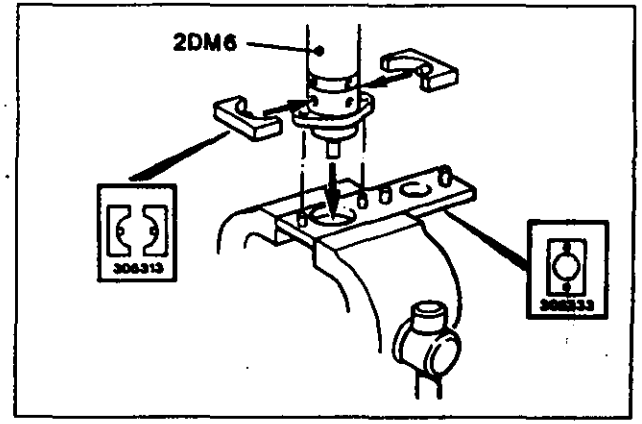

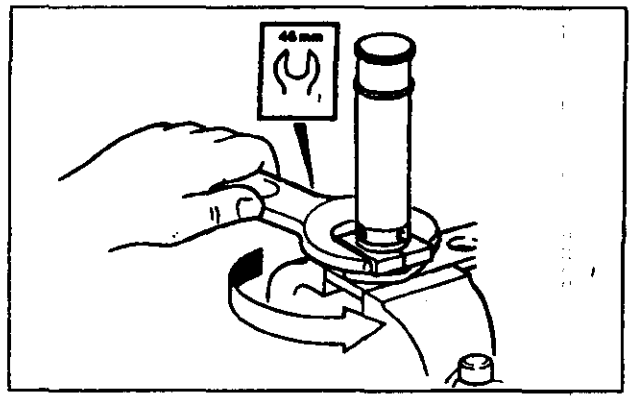
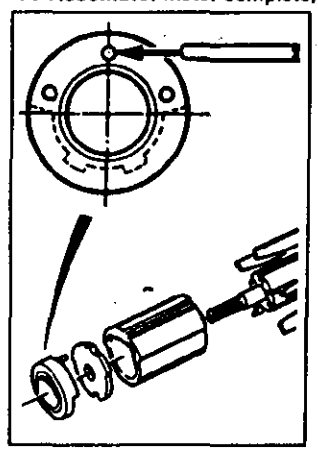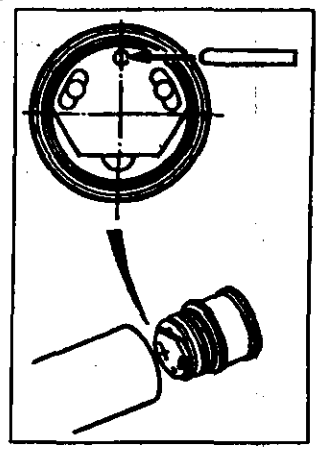
To Assemble: Motor complete, refer to main illustration