AirToolPro.com by Zampini Industrial Group - Premier Tool Suppliers Since 1987 1-800-353-4676

Desoutter™ DRYLINE™

Desoutter Limited. HP2 7DR. UK.

2F189-PX

(GB) Servicing Instructions
Parts List
Operating Instructions

(D) Wartungsanleitung
Teileliste
Bedienungsanleitung

(F) Manuel d'entretien
Liste de pièces
Manuel d'utilisation

(E) Instrucciones de Servicio
Listas de Repuestos
Instrucciones de Operación

(P) Instruções de Manutenção
Listas de Peças
Instruções de Funcionamento

(I) Istruzioni per la Manutenzione
Elenco delle Parti
Istruzioni Operative

(GR) Οδηγίες Συντήρησης
Κατάλογοι Ανταλλαχτιχών
Οδηγίες Λειτουργιάς

(NL) Onderhoudsinstructies
Onderdelenlijst
Bedieningsinstructies

(DK) Servicevejledning
Liste over dele
Betjeningsvejledning

(N) Serviceinstruksjoner
Delelister
Driftsinstruksjoner

(S) Serviceinstruktioner
Reservdelslista
Bruksanvisning

(FIN) Huolto-ohjeet
Osaluettelo
Käyttöohjeet

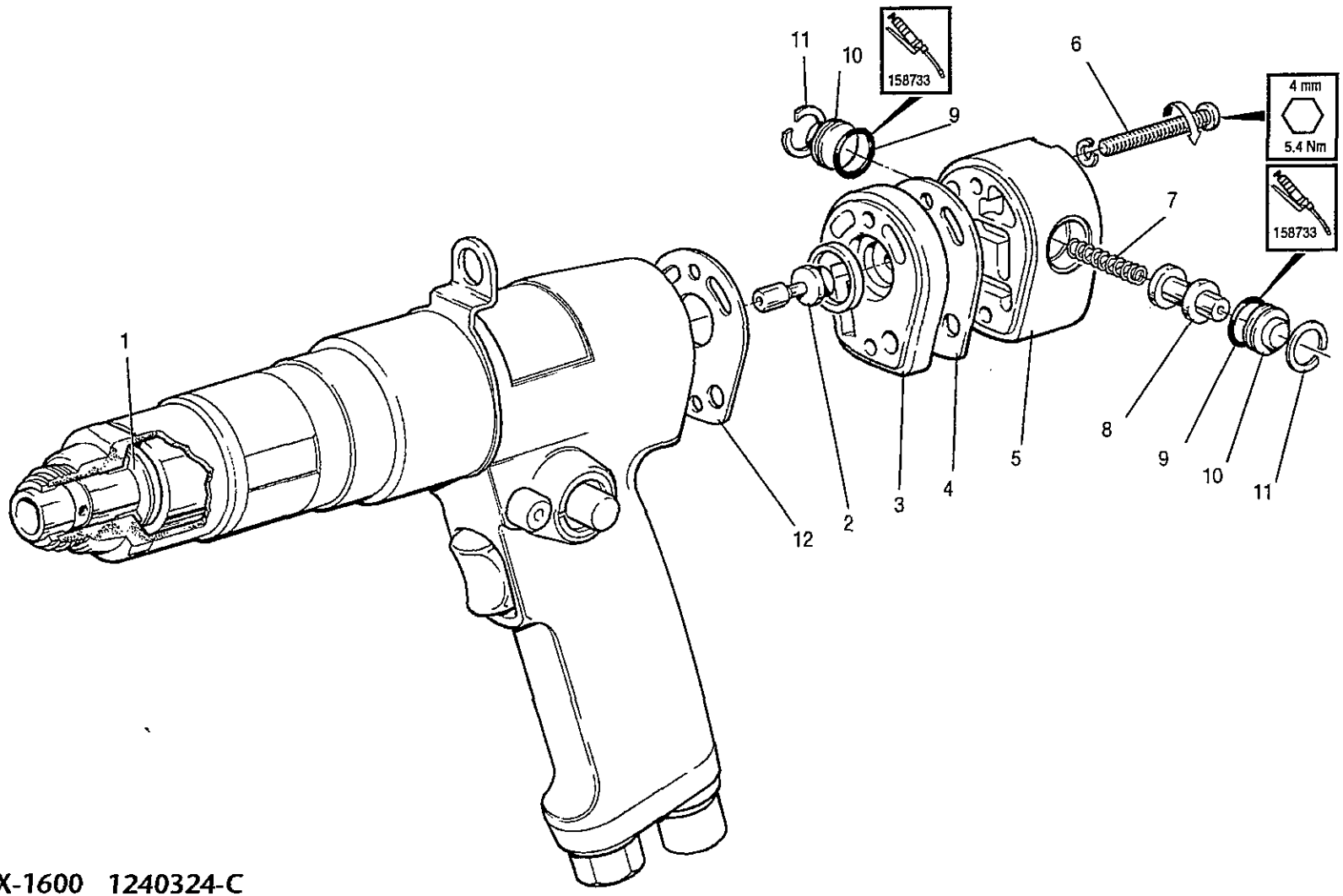

2F189-PX-1600	1240324-C
2F189-PX- 900	1240584-C
2F189-PX- 600	1240744-C
2F189-PX- 400	1240904-C

AirToolPro.com by Zampini Industrial Group - Premier Tool Suppliers Since 1987 1-800-353-4676

Desoutter™

Desoutter Limited. HP2 7DR. UK.

Item Ps. Nr. No. Article	Part No Teil Nr. Référence	Qty Menge Qté
1	296633 (1/4")	1
2	292433	1
3	269223	1
*4	269283	1
5	269253	1
6	236383	2
7	271093	1
8	269263	1
*9	202323	2
10	269273	2
*11	164993	2
*12	278793	1

2F189PX-1600 = 2F89PX-2000
2F189PX-900 = 2F89PX-1100
2F189PX-600 = 2F89PX-750
2F189PX-400 = 2F89PX-500

(GB) * Indicates normal replacement items. It is recommended that adequate stocks are held for servicing requirements.
Always quote tool model number, serial number and spare part number when ordering spares.

(D) * Bedeutet normale Verschleißteile. Es empfiehlt sich eine angemessene Menge für Wartungszwecke auf Lager zu halten.
Bei der Bestellung von Ersatzteilen, bitte immer angeben: Typennummer der Bohrmaschine, Werknummer und Ersatzteilnummer.

(F) * Le symbole astérisque (*) indique des articles de rechange normaux. Il est recommandé d'en conserver des stocks suffisants pour assurer toutes les opérations d'entretien courant.
Lors de la commande de pièces de rechange, toujours citer le numéro de modèle de l'outillage, son numéro de série et le numéro de référence de chaque pièce de rechange.

(E) * Indica elementos de reposición regular. Se recomienda tener una cantidad adecuada de los mismos en reserva a efectos de mantenimiento.
Al encargar piezas de recambio, siempre debe indicarse el número de modelo de la herramienta, su número de serie y el número de la pieza de recambio.

(P) * Indica itens que são substituidos regularmente. É recomendado que estoques adequados sejam mantidos para requisitos de manutenção.
Cite sempre o número do modêlo da ferramenta, número de série, e número da peça accesória quando pedindo acessórios.

(I) * L'asterisco denota recambi normali. Si consiglia di mantenere scorte adeguate alle esigenze della manutenzione.
Nell'ordinazione di ricambi citare il numero di modello dell'utensile, il numero di matricola e quello di catalogo del pezzo.

(GR) * Σημαίνει συνηθισμένα είδη (τεμάχια) για αντικατάσταση. Σας συνιστύμε να τηρείτε αρκετό απόθεμα από τα είδη που χρειάζονται αντικατάσταση.
Οταν παραγγέλνετε ανταλλακτικά πάντα να γράφετε τον αριθμό μοντέλου του εργαλείου, τον αριθμό σειράς και τον αριθμό ανταλλακτικού.

(NL) * Betekent normale reserveartikelen. Het verdient aanbeveling om voldoende voor onderhoudsbehoeften vooradig te hebben.
Bij bestelling van reserveonderdelen geef altijd modelnummer, volgnummer en reserveonderdeelnummer van het werktuig op.

(DK) * Indikerer normale udskiftningsemner. Det anbefales at have rigelige forsyninger af dele til brug i forbindelse med eftersyn.
Opgiv altid det korrekte værktøjsmodelnummer, serienummer og reservedelsnummer ved bestilling af reservedele.

(N) * Angir normale reservedeler. Det anbefales at tilstrekkelig antall reservedeler holdes på lager.
Ved bestilling av deler må man alltid oppgi verktøyets modellnr., serienr. og reservedelens nr.

(S) * Utmärker normala reservdelar. Vi rekommenderar att tillräckligt antal lagras för serviceändamål.
Uppge alltid verktygets modellnummer, serienummer samt reservdelens nummer vid beställtning av reservdelar.

(FIN) * Viittaa tavallisiin varaosiin. Suosittelemme, että riittäviä määriä pidetään varastossa huoltotarpeita varten.
Työkalun mallinumero, sarjanumero ja varasosan numero on aina mainittava tilattaessa.

AirToolPro.com by Zampini Industrial Group - Premier Tool Suppliers Since 1987 1-800-353-4676

Desoutter™

Desoutter Limited. HP2 7DR. UK.

STATEMENT OF USE

Product is designed for installing threaded captive fasteners in metal and plastic. No other use permitted.
As purchased this tool is fitted with a Nose Attachment Kit to suit the thread in the captive fastener. Details of these kits will be found below.

OPERATING

With the captive fastener located in position the operator should engage the drive screw mandrel part of the nose attachment kit with the fastener. Press and hold on the control lever.
This tool will run down onto the fastener and lock it in position; at this point the pre-set clutch will action automatically selecting reverse rotation to power the tool out of the fastener.
The throttle control should only be released when the tool has completed the work cycle.
NOTE: Should a fault be encountered during a fixing operation the manual reverse button should be pressed to disengage the tool.

WARNING

BEFORE OPERATING THIS TOOL, READ AND UNDERSTAND PNEUMATIC SCREWDRIVER SAFETY INSTRUCTIONS PART NO. 37027.3

CLUTCH ADJUSTMENT

The basic adjustment is for the 2F89 tool. Trial operations must be carried out to obtain the ideal fixing for the fastener; too weak a clutch setting and the fastener will be loosely retained, too strong a setting and the thread in the fastener could be damaged.

SERVICING INSTRUCTIONS

The information found in the 2F89 Service Sheet should be used when servicing this tool. Mechanical variations are shown in the illustrations.

Lubrication

158733 = Molycote PG75
208893 = Rocol M204G
273283 = BP FG00EP
307463 = Loctite Superflex clear
273273 = BP Q5618
27652 = ISO VG 15

DATA

Maximum air pressure Pmax = 6.3 bar
Minimum air pressure Pmin = 2.0 bar
Sound Pressure Level (dBa) = 82 ± 2 re CAGI-PNEUROP Test code
Vibration Level (m/sec²) = <2.5 re ISO 8662
Weight
2F189 PX-1600 = 1.5 kg.
2F189 PX- 900 = 1.6 kg.
2F189 PX- 600 = 1.6 kg.
2F189 PX- 400 = 1.6 kg.

©Copyright 1998, Desoutter Limited. HP2 7DR. UK.
All rights reserved. Any unauthorized use or copying of the contents or part thereof is prohibited. This applies in particular to trademarks, model *denominations, part numbers and drawings.*
Use only authorized parts. Any damage or malfunction caused by the use of unauthorized parts is not covered by Warranty or Product Liability.

NOSE ATTACHMENT KITS

These sizes made to special order

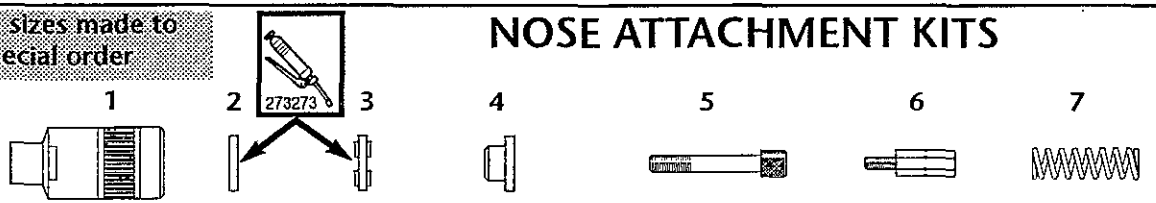

Thread Size	Nose Part No.	Thrust Washer Part No.	Thrust Bearing Part No.	Bearing sleeve/washer Part No.	Drive Screw mandrel Part No.	Drive Key A/F size	Drive Key Part No.	Spring Part No.	Assembly 1-7 Part No.
M3 x 0.5	273513	273603	273613	273423	35mm 279683	2.5mm	72362	16313	76552
M4 x 0.7	273533	273603	273613	273443	35mm 273643	3mm	72172	16313	76562
M5 x 0.8	273563	273603	273613	273473	35mm 273653	4mm	72192	16313	76572
M6 x 1.0	273573	273603	273613	273483	35mm 273893	5mm	72222	16313	76582
M8 x1.25	273593	273603	273613	279023	40mm 236503	6mm	72242	16313	76592
6x 32 UNC	273523	273603	273613	273433	1 1/4" 273663	3/32"	72162	16313	76602
8x 32 UNC	273543	273603	273613	273453	1 1/2" 101523	1/8"	72182	16313	76622
10x 24 UNC	273553	273603	273613	273463	1 1/2" 273673	5/32"	72192	16313	76632
10x 32 UNF	273553	273603	273613	273463	1 1/2" 273683	5/32"	72192	16313	76642
1/4" UNC	273583	273603	273613	273493	1 1/2" 273693	3/16"	72202	16313	76652
1/4" UNF	273583	273603	273613	273493	1 1/2" 78283	3/16"	72202	16313	76662
3/16" BSF	273553	273603	273613	273463	1 1/4" 273713	5/32"	72192	16313	76692
1/4" BSF	273583	273603	273613	273493	1 1/2" 273723	3/16"	72202	16313	76702
1/8" Whit	273513	273603	273613	273423	1 1/4" 273743	3/32"	72162	16313	76732
3/16" Whit	273553	273603	273613	273463	1 1/4" 273753	5/32"	72192	16313	76742
	273583	273603	271613	273493	1 1/2" 15783	3/32"	72202	16313	76752
4BA	273523	273603	273613	273433	1 1/4" 273663	3/32"	72162	16313	76602
2BA	273553	273603	273613	273463	1 1/2" 101523	5/32"	72182	16313	76622
0BA	273573	273603	273613	273483	1 1/2" 101523	3/16"	72202	16313	76792

AirToolPro.com by Zampini Industrial Group - Premier Tool Suppliers Since 1987 1-800-353-4676

Desoutter™ DRYLINE™

Desoutter Limited.London NW9 6ND

2F89-PX

- (GB) Servicing Instructions / Parts List / Operating Instructions
- (D) Wartungsanleitung / Teileliste / Bedienungsanleitung
- (F) Manuel d'entretien / Liste de pièces / Manuel d'utilisation
- (E) Instrucciones de Servicio / Listas de Repuestos / Instrucciones de Operación
- (P) Instruções de Manutenção / Listas de Peças / Instruções de Funcionamento
- (I) Istruzioni per la Manutenzione / Elenco delle Parti / Istruzioni Operative
- (GR) Οδηγίες Συντήρησης / Κατάλογοι Ανταλλαχτιχών / Οδηγίες Λειτουργιάς
- (NL) Onderhoudsinstructies / Onderdelenlijst / Bedieningsinstructies
- (DK) Servicevejledning / Liste over dele / Betjeningsvejledning
- (N) Serviceinstruksjoner / Delelister / Driftsinstruksjoner
- (S) Serviceinstruktioner / *Reservdelslista* / Bruksanvisning
- (FIN) Huolto-ohjeet / Osaluettelo / Käyttöohjeet

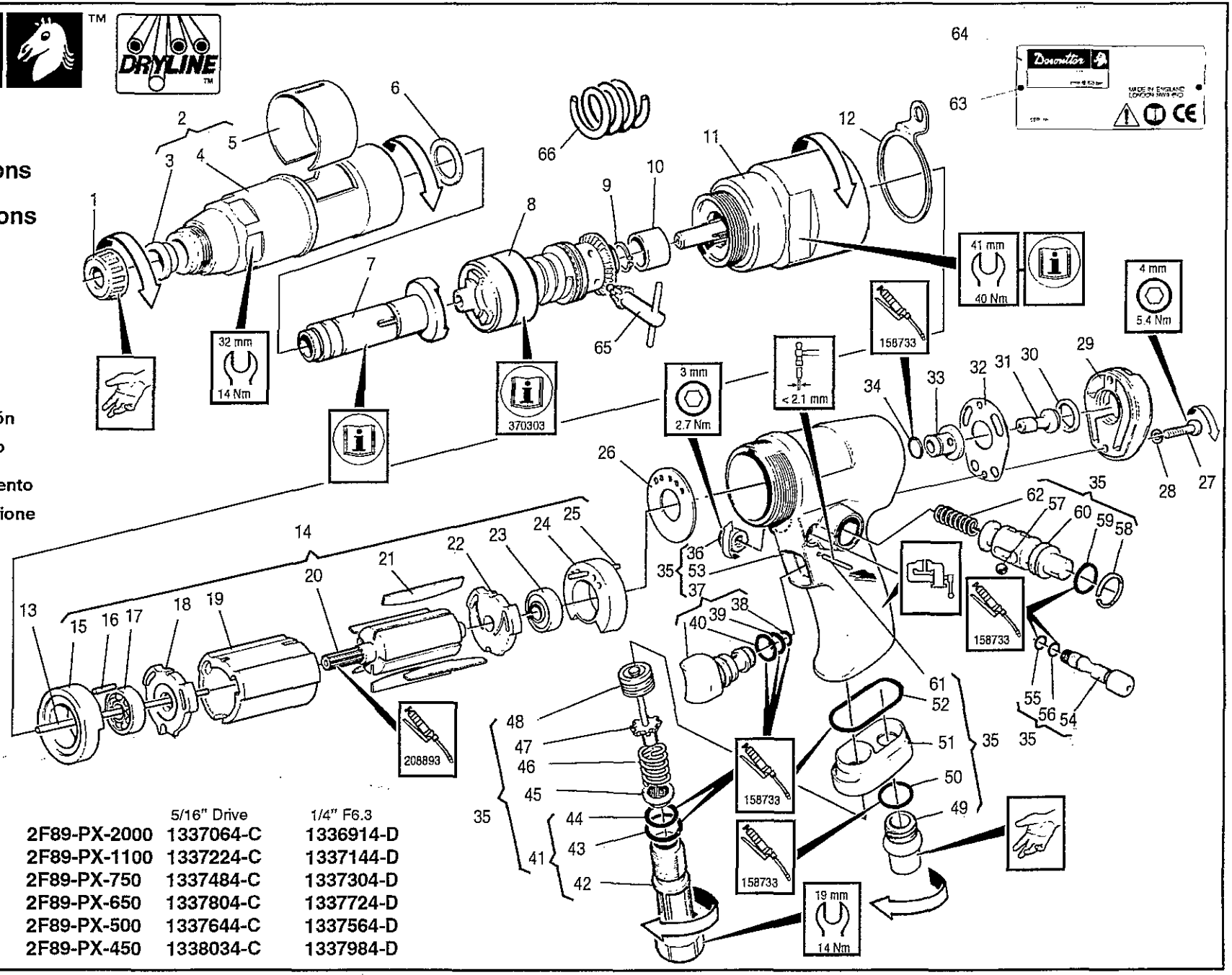

	5/16" Drive	1/4" F6.3
2F89-PX-2000	1337064-C	1336914-D
2F89-PX-1100	1337224-C	1337144-D
2F89-PX-750	1337484-C	1337304-D
2F89-PX-650	1337804-C	1337724-D
2F89-PX-500	1337644-C	1337564-D
2F89-PX-450	1338034-C	1337984-D

AirToolPro.com by Zampini Industrial Group - Premier Tool Suppliers Since 1987 1-800-353-4676

Item Ps. Nr. No.	Article	Part No Teil Nr. Référence	Qty Menge Qté
1		74088	1
2		301513	1
		(2000RPM)	
		(1100RPM)	
		(650RPM)	
		(450RPM)	
		301523	1
		(750RPM)	
		(500RPM)	
3		73798	1
4		296873	
		(2000RPM)	
		(1000RPM)	
		(650RPM)	
		(450RPM)	
		298913	*1
		(750RPM)	
		(500RPM)	
5		161253	1
*6		74970033	AR
		(0.003in)	
		74970053	AR
		(0.005in)	
		74970103)	AR
		(0.010in)	
7		4 of 17	
8		R 296713	1
		(2000RPM)	
		(1100RPM)	
		G 297023	
		(650RPM)	
		(450RPM)	
		N 297003	1
		(750RPM)	
		(500RPM)	
*9		42353	1
10		157513	1
11		3 of 17	
12		270233	1
		(2000RPM)	
		301533	
		(1100RPM	
		(650RPM)	
		(450RPM)	
		301543	
		(750RPM)	
		(500RPM)	
13		222363	1
		(2000RPM)	
		218213	1
		(1100RPM)	
		(750RPM)	
		(650RPM)	
		(500RPM)	
		(450RPM)	
14		305763	1
		(2000RPM)	
		305743	1
		(1100RPM)	
		(750RPM)	
		(650RPM)	
		305753	1
		(500RPM)	
		(450RPM)	
15		256743	1
16		251693	1
*17		64368	1
18		256733	1
19		500203	1
20		251743	1
		(2000RPM)	
		251763	1
		(1100RPM)	
		(750RPM)	
		(650RPM)	
		251753	1
		(500RPM)	
		(450RPM)	
*21		305233	5
22		256723	1
*23		500693	1
24		256713	1
25		256753	1
*26		251873	1
27		223113	2
28		185373	2
29		251223	*1
30		251703	1
31		323343	1
*32		278793	1
33		235933	1
*34		202323	1
35		255623	
		(G¼)	
		255633	
		(¼"NPT)	
36		251263	1
37		251723	1
*38		43493	1
*39		43463	1
*40		500973	1
41		501193	1
		(G¼)	
		501213	
		(¼"NPT)	
42		500353	1
		(G¼)	
		500343	1
		(¼"NPT)	
*43		99853	1
*44		500973	1
45		500933	1
46		18173	1
47		501093	1
48		345163	1
49		256433	1
*50		40533	1
51		251233	1
*52		52663	1
53		255673	1
54		251253	1
*55		278203	1
*56		251733	1
57		15043	1
*58		255583	1
*59		375663	1
60		251273	1
*61		500913	1
62		255593	1
63		54853	2
64		363373	1
Supplied Accessories			
65		29932	1
66		73318(Blue)	1
		(1100RPM)	
		(650RPM)	
		(450RPM)	

(GB) * Indicates normal replacement items. It is recommended that adequate stocks are held for servicing requirements.
Always quote tool model number, serial number and spare part number when ordering spares.

(D) * Bedeutet normale Verschleißteile. Es empfiehlt sich eine angemessene Menge für Wartungszwecke auf Lager zu halten.
Bei der Bestellung von Ersatzteilen, bitte immer angeben: Typennummer der Bohrmaschine, Werknummer und Ersatzteilnummer.

(F) * *Le symbole astérisque (*) indique des articles de rechange normaux.* Il est recommandé d'en conserver des stocks suffisants pour assurer toutes les opérations d'entretien courant.
Lors de la commande de pièces de rechange, toujours citer le numéro de modèle de l'outillage, son numéro de série et le numéro de référence de chaque pièce de rechange.

(E) * Indica elementos de reposición regular. Se recomienda tener una cantidad adecuada de los mismos en reserva a efectos de mantenimiento.
Al encargar piezas de recambio, siempre debe indicarse el número de modelo de la herramienta, su número de serie y el número de la pieza de recambio.

(P) * Indica itens que são substituidos regularmente. É recomendado que estoques adequados sejam mantidos para requisitos de manutenção.
Cite sempre o número do modêlo da ferramenta, número de série, e número da peça accesória quando pedindo acessórios.

(I) * *L'asterisco denota recambi normali. Si consiglia di mantenere scorte* adeguate alle esigenze della manutenzione.
Nell'ordinazione di ricambi citare il numero di modello dell'utensile, il numero di matricola e quello di catalogo del pezzo.

(GR) * Σημαίνει συνηθισμένα είδη (τεμάχια) για αντικατάσταση. Σας συνιστούμε να τηρείτε αρκετό απόθεμα από τα είδη που χρειάζονται αντικατάσταση.
Οταν παραγγέλνετε ανταλλακτικά πάντα να γράφετε τον αριθμό μοντέλου του εργαλείου, τον αριθμό σειράς και τον αριθμό ανταλλακτικού.

(NL) * Betekent normale reserveartikelen. Het verdient aanbeveling om voldoende voor onderhoudsbehoeften vooradig te hebben.
Bij bestelling van reserveonderdelen geef altijd modelnummer, volgnummer en reserveonderdeelnummer van het werktuig op.

(DK) * Indikerer normale udskiftningsemner. Det anbefales at have rigelige forsyninger af dele til brug i forbindelse med eftersyn.
Opgiv altid det korrekte værktøjsmodelnummer, serienummer og reservedelsnummer ved bestilling af reservedele.

(N) * Angir normale reservedeler. Det anbefales at tilstrekkelig antall reservedeler holdes på lager.
Ved bestilling av deler må man alltid oppgi verktøyets modellnr., serienr. og reservedelens nr.

(S) * Utmärker normala reservdelar. Vi rekommenderar att tillräckligt antal lagras för serviceändamål.
Uppge alltid verktygets modellnummer, serienummer samt reservdelens nummer vid beställtning av reservdelar.

(FIN) * Viittaa tavallisiin varaosiin. Suosittelemme, että riittäviä määriä pidetään varastossa huoltotarpeita varten.
Työkalun mallinumero, sarjanumero ja varasosan numero on aina mainittava tilattaessa.

AirToolPro.com by Zampini Industrial Group - Premier Tool Suppliers Since 1987 1-800-353-4676

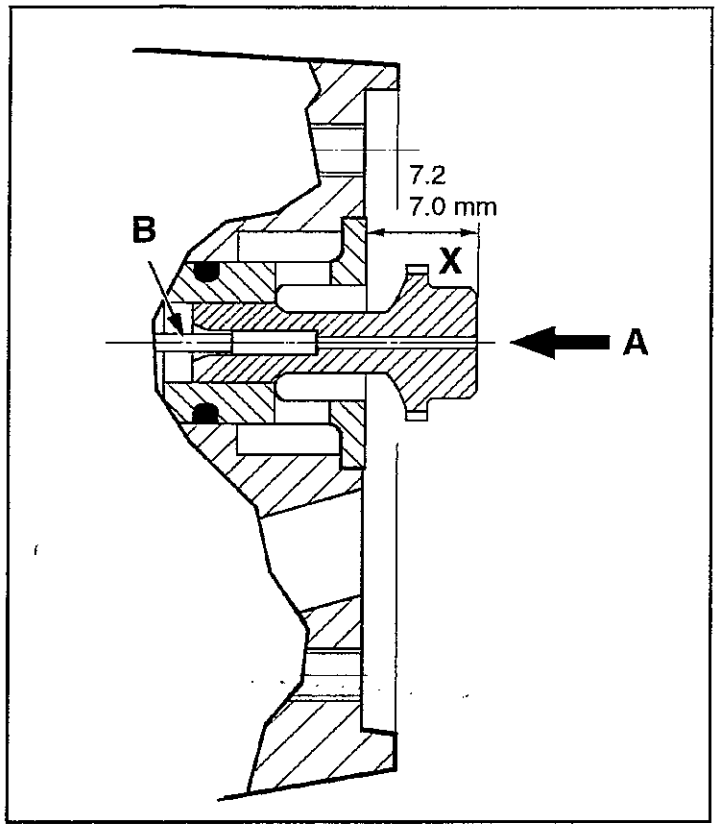

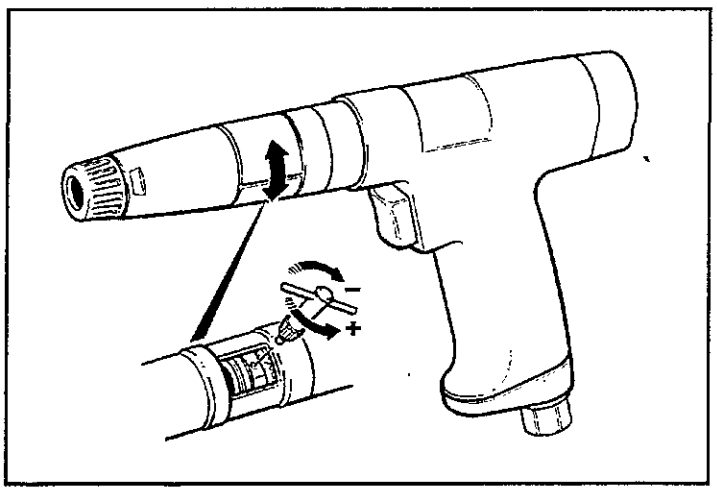

GB Setting the push-rod

Apply shims and spacers to obtain a maximum axial clutch movement of 0.13mm.

Note:Shims must be adjacent to face of bit holder.Apply pressure in direction of arrow (A).Apply pressure to push rod (B) until a hard stop is felt.. Measure dimension X.

Obtain the specified dimension by grinding the push rod.(B)

D Schubstange einstellen

Verwenden Sie Distanz- und Abstandscheiben, um eine maximale Längsbewegung der Kupplung von 0.13mm zu erreichen.
Anmerkung: Distanzscheiben müssen neben der Stirnfläche des Drehzahnhalters sein.Wenden Sie einen Druck an Schubstange (B) gegen die Feder an bis ein Endhaltpunkt gefühlt werden kann. -Messen Sie Maß X.

Durch Schleifen der Schubstange (B) Sollmaß erreichen.

F Réglage du piston de poussée

Utiliser des cales et des entretoises afin d'obtenir sur l'embrayage, un jeu axial maximum de 0,13 mm

Remarque: les cales doivent être placées sur le côté du support outil. Appliquer une pression selon le sens indiqué par la flèche (A).Appliquer une pression sur le piston depoussée (B) contre le ressort jusqu'à sentir la butée. Puis prendre la mesure de la cote X.

Meuler le piston de poussée (B) jusqu'à l'obtention de la cote spécifiée.

E Ajustar la barra de presión

Aplique chapas de relleno y espaciadores para obtener un movimiento axial de embrague máximo de 0,13mm.
Nota: Las chapas de relleno deben estar adyacentes a la cara del portabarrenas. Ejerz a presión en la dirección indicada por la flecha (A). Ejerz a presión sobre la varilla empujadora (B) contra el resorte hasta que sienta una parada en seco.

Mida la dimensión X.

Para obtener la dimensión especificada rectifique la varilla empujadora (B)

P Ajuste do tirante

Use calços e espaçadores para obter um máximo movimento axial da embraiagem de 0.13 mm.

Atençaão: Calços precisam estar adjacente à face do soquete da broca.Aplique pressão em direção ã seta (A). Pressione o tirante B contra a mola até sentir uma parada súbita. Mede a dimensao X.

Estnerilhe o tirante B para obter a dimensão specificada.

I Regolazione dell'asta di spinta

Inserire gli spessori ed i distanziatori per ottenere un movimento assiale massimo della frizione di 0,13 mm.

Nota: gli spessori devono essere adiacenti alla superficie del portautensili. Applicare una pressione nella direzione della freccia (A).Applicare una pressione per spingere l'asta (B) contro la molla fino a quando non si sente un arresto deciso. Misurare la dimensione X.

Ottenere la dimensione specificata molando l'asta di spinta (B).

GR

Τοποθετήστε σφήνες και διαχωριστές για μέγιστη αξονική κίνηση συμπλέκτη 0,13 χλστ. Σημείωση: Οι σφήνες πρέπει να είναι κοντά στην επιφάνεια της θέσης του τρυπανιού. Εξασκείστε πίεση προς την κατεύθυνση του τόξου Α. Εξασκείστε πίεση για να σπρώξετε τη ράβδο Β πάνω στο ελατήριο έως ότου σταματήσει να προχωρεί. Μετρήστε τη διάσταση Χ.

Μπορείτε να πάρετε την καθορισμένη διάσταση αφού τροχίσετε την ωστική ράβδο Β.

NL De drukstang afstellen

Vulplaatjes en afstandsstukken aanbrengen on een maximale koppeling verplaatsing te bewerkstelligen van 0,13m OPM:Vulplaatjes moeten tege bithouder aan voorkant zitten.Druk uitoefenen in richting van pijl (A).Druk tegen de veer in uitoefenen op drukstang (B) tot een harde aanslag voelbaar wordt . - Afmeting 'X' meten.

Drukstang (B)afslijpen tot de gespecificeerde afmeting verkregen is.

DK Stødstangens indstilling

Brug mellemlæg og afstandsholdere for at opnå maksimal aksial koblingsbevægelse på 0,13 mm, OBS:Mellemlægget skal sidde tæt på forsiden af værktøjsholderen.
Anbring trykket i (A)-pilens retning. Brug tryk på trykstang (B) mod fjederen til den støder mod noget hårdt. Mål dimension X.
Den specificerede dimension opnås ved at slibe trykstang (B).

N Å innstille skubbestangen.

Bruk mellomlegg og avstandsholdere for å oppna maksimal aksial koblingsbevegelse på 0,13mm.

Merk: mellomlegg må ligge nær opptil frontsiden av borholderen. Bruk trykk i retning av pil (A). Bruk trykk for å skyve stang (B) mot fjæren til den støter mot noe hardt. - Mål dimensjon X.
Oppnå den spesifiserte dimensjonen ved å slipe støtstang (B).

S Stötstångens inställning

Använd mellanlägg och avståndsbrickor för att uppnå maximal axialrörelse pa kopplingen av 0,13 mm.

Obs.:Mellanlägg maste befinna sig intill framsidan paverktygshallaren.Anbringa tryck i (A) -pilens riktning.Anbringa tryck pa tryckstången (B) mot fjädern till dess att ett bestämt stopp avkänns. - Mät upp dimension X.
Uppnå specificerad dimension genom att slipa avtryckstången (B).

FIN Työntötangon asettaminen

Aseta kiilat ja välikappaleeet saavuttaaksesi 0,13mm:n maksimi-aksiaalikytkinliikunnan.
Huom:kiilattäytyyollateräpidikkeenkyljen viereinen.
Aseta paine nuolen (A) suuntaan.
Aseta paine työntötankoon (B joustavastaan kunnes tuntuu tiukka pysäytys.
-Mittaa mitta X.
Saavuta spesifioitu mitta hiomalla työntötankoa (B).

AirToolPro.com by Zampini Industrial Group - Premier Tool Suppliers Since 1987 1-800-353-4676

Item Ps. Nr. No. Article	Part No Teil Nr. Référence	Qty Menge Qté
F.6.3		
1	370683	1
*2	200083	1
3	301013	1
4	370673	1
5	3543	1
6	370653	1
7	301043	1
5/16"		
8	298043	1
9	86058	1
10	72408	1
11	296643	1
F.6.3 - optional		
12	296973	1
13	86058	1
14	296633	1
15	66868	1
16	256763	1
5mm		
17	311463	1
18	86058	1
19	81233	1
20	311473	1

F6.3

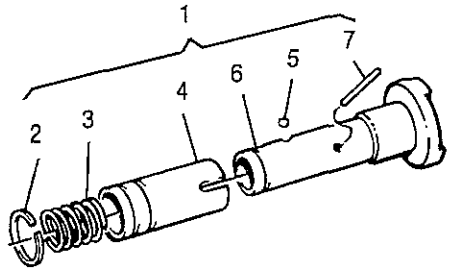

5/16"

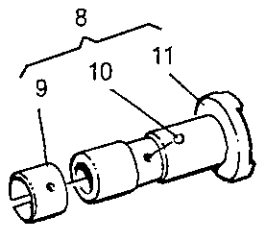

F6.3 Optional

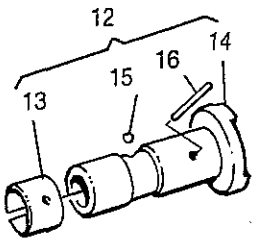

5mm

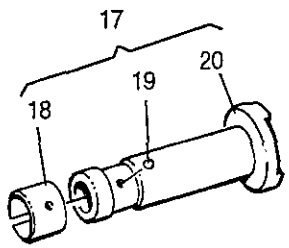

AirToolPro.com by Zampini Industrial Group - Premier Tool Suppliers Since 1987 1-800-353-4676

Item Ps. Nr. No. Article	Part No Teil Nr. Référence	Qty Menge Qté
1	251523 (2000RPM) 251513 (1100RPM) (750RPM) (650RPM) (500RPM) (450RPM)	1 1
*2	251983	1
3	500763	1
4	500813	1
5	272783 (2000RPM) (750RPM) (650RPM) (500RPM) (450RPM)	1
	251943 (1100RPM)	1
6	251973 (2000RPM) 251403 (1100RPM) (750RPM) (650RPM)	3 3
	251963 (500RPM) (450RPM)	3
*7	251663 (2000RPM) (750RPM) (500RPM) (2000RPM) (450RPM) 251673 (1100RPM) (650RPM)	3 3
8	301533 (2000RPM) (1100RPM) (650RPM) (450RPM) 301543 (750RPM) (500RPM)	1 1
9	251483 (750RPM) (650RPM) (500RPM) (450RPM)	1
10	251433 (1100 RPM) 251953 (750RPM) 251413 (650)RPM) (450RPM) 251573 (500RPM)	1 1
*11	251403 (1100RPM) (750RPM) (650RPM) 251963 (500RPM) (450RPM)	3 3
12	251673 (1100RPM) (750RPM) (650RPM) 251663 (500RPM) (450RPM)	3 3
13	501943 (2000RPM) 251473 (1100RPM) (750RPM) (650RPM) (500RPM) (450RPM)	1 1
14	251993	1
15	251373	1
16	251393 (750RPM) (650RPM)	1

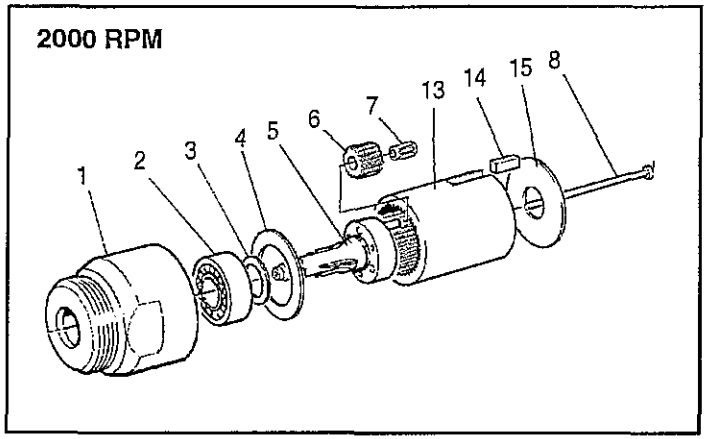

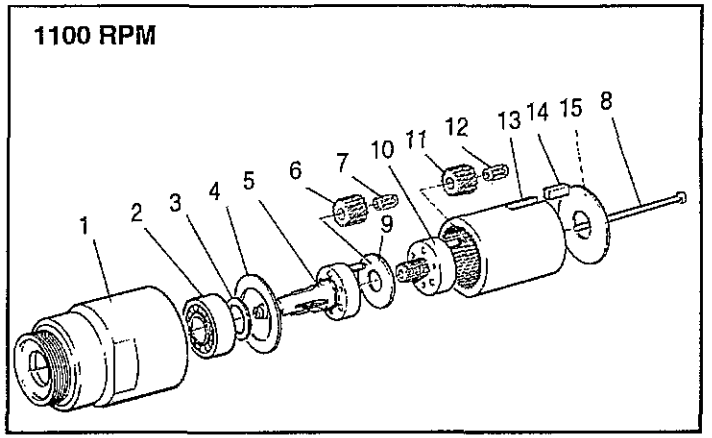

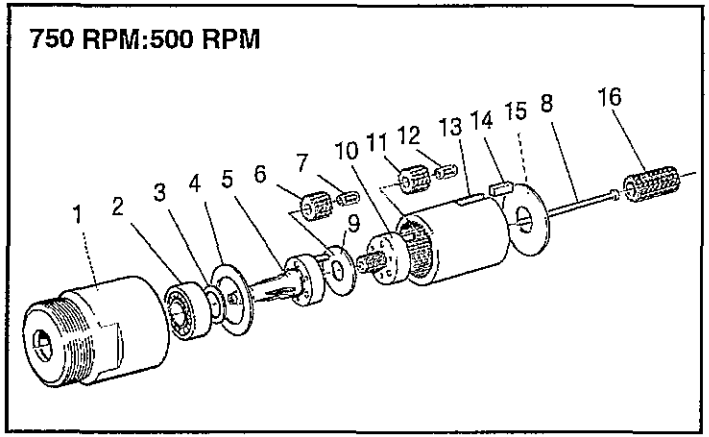

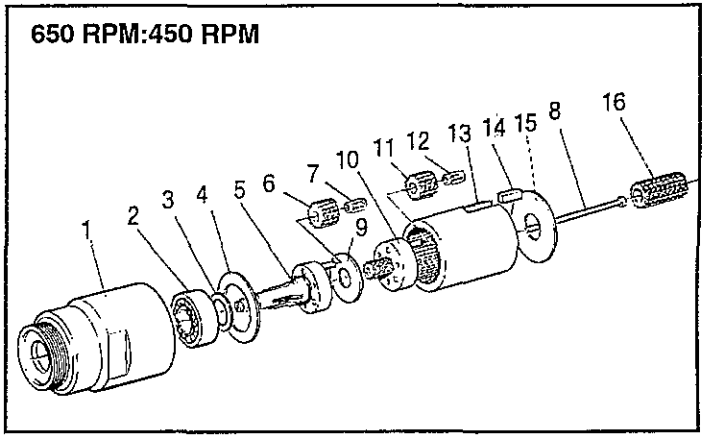

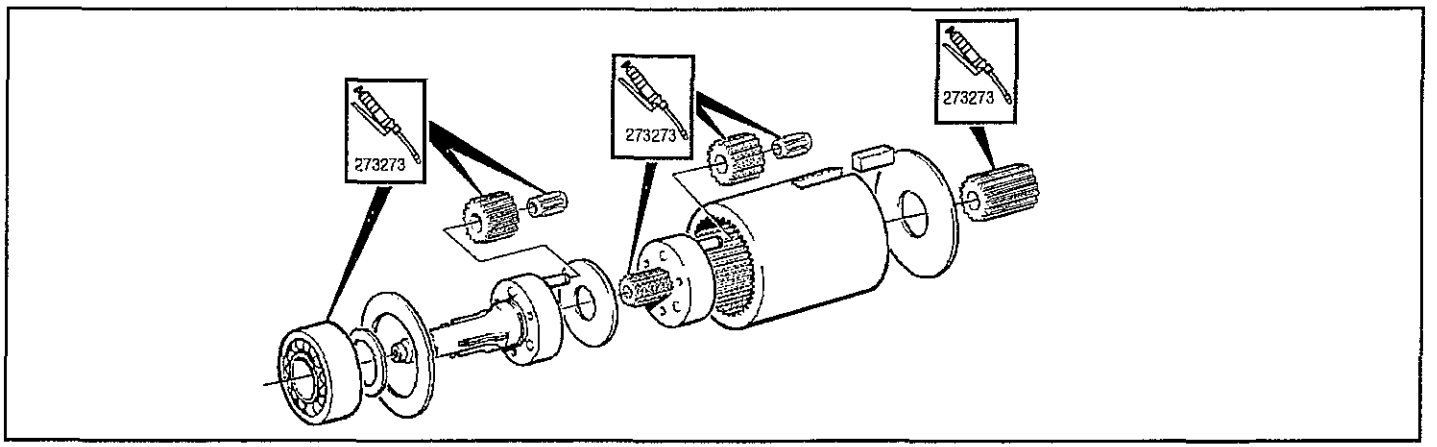

AirToolPro.com by Zampini Industrial Group - Premier Tool Suppliers Since 1987 1-800-353-4676

STATEMENT OF USE

Product is designed for installing and removing threaded fasteners in wood, metal and plastic.

GENERAL

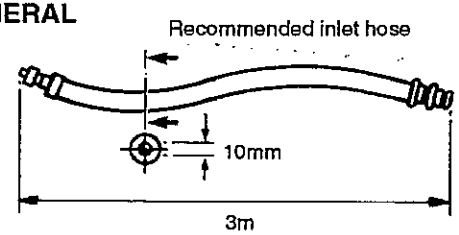

Lubrication

This is a DRYLINE tool designed to operate on a totally dry air line i.e. one without any oil or water moisture.
DRYLINE tools can also operate on a lubricated or partly lubricated air line thus allowing easy interchangeability with existing installations. If lubrication is required an air line lubricator should be fitted down stream of the filter. Use ISO VG 15.

158733 = Molycote PG75
208893 = Rocol M204G
273273 = BP Q5618
273283 = BP FG00EP
27662 = ISO VG 15

DATA

Maximum air pressure Pmax	= 6.3 bar
Minimum air pressure Pmin	= 2.0 bar
Sound Pressure Level (dBA)	= 82 ± 2 re. CAGI-PNEUROP Test code
Vibration Range (m/sec²) re. ISO 8662	= 2.5

Weight

2F89-PX-2000	= 1.3kg
2F89-PX-1100/650/450	= 1.4kg
2F89-PX-750/500	= 1.5kg

WARNING

BEFORE OPERATING THIS TOOL, READ AND UNDERSTAND PNEUMATIC SCREWDRIVER SAFETY INSTRUCTIONS PART NO. 37027.3

Accessories

A wide range of accessories are available and a suitable item should be selected from the relevant Desoutter Catalogue.

OPERATING

With the correct accessory fitted, connect the tool to the air supply. Grip the tool then press onto the fixing that is to be tightened and depress the throttle control.
The motor will start and tighten the fixing to the required torque set by adjusting the tension on the clutch spring.
At this point the internal drive is disengaged and the air to the motor cut off. Release throttle control and remove tool from fixing to allow it to reset.
To engage reverse rotation; press the reverse button and toggle lock pin.

MAINTENANCE INSTRUCTIONS

1. Service should be carried out at intervals of 1000 hours' use.
2. All torque figures ± 10%.
3. Replace as necessary all 'O' rings, bearings and rotor blades. See service kits.
4. When disposing of components, lubricants, etc ... ensure that the relevant safety procedures are carried out.
5. Indicates direction of dismantling.
6. Torque values stated are for assembly.

WARNING

THE ROTOR BLADES IN THIS TOOL HAVE A PTFE CONTENT. THE NORMAL HEALTH AND SAFETY RECOMMENDATIONS CONCERNING PTFE MUST BE OBSERVED WHEN HANDLING THESE ROTOR BLADES.

(1) DO NOT SMOKE.
(2) MOTOR COMPONENTS MUST BE WASHED WITH CLEANING FLUID AND NOT BLOWN CLEAR WITH AN AIR LINE.
(3) THE SILENCER MUST BE REPLACED WHEN DIRTY, DO NOT CLEAN AND RE-USE.
(4) WASH HANDS BEFORE COMMENCING ANY OTHER ACTIVITY.

CYLINDER ORIENTATION

The cylinder must be correctly orientated so that all cut-outs in the cylinder and the bearing plates co-incide

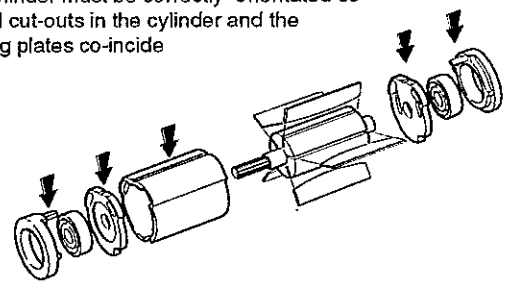

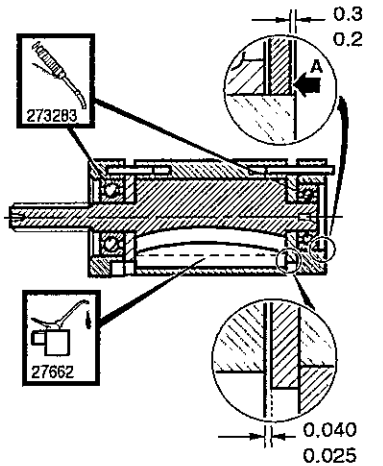

END CAP TO BE PRESSED INTO BEARING HOUSING IN DIRECTION OF ARROW 'A' TO DIMENSION SHOWN

THIS DIMENSION TO APPLY AFTER BEARING IS PRESSED ONTO ROTOR

©Copyright 1995 Desoutter, London NW9 6ND, UK.
All rights reserved. Any unauthorized use or copying of the contents or part thereof is prohibited. This applies in particular to trademarks, model denominations, part numbers and drawings.
Use only authorized parts. Any damage or malfunction caused by the use of unauthorized parts is not covered by Warranty or Product Liability.

Desoutter™
Desoutter Limited