AirToolPro.com by Zampini Industrial Group - Premier Tool Suppliers Since 1987 1-800-353-4676

Desoutter™ DRYLINE™

Desoutter Limited.HP2 7DR UK.

5534/55354/5674/56754

(GB) Servicing Instructions
Parts List
Operating Instructions

(D) Wartungsanleitung
Teileliste
Bedienungsanleitung

(F) Manuel d'entretien
Liste de pièces
Manuel d'utilisation

(E) Instrucciones de Servicio
Listas de Repuestos
Instrucciones de Operación

(P) Instruções de Manutenção
Listas de Peças
Instruções de Funcionamento

(I) Istruzioni per la Manutenzione
Elenco delle Parti
Istruzioni Operative

(GR) Οδηγίες Συντήρησης
Κατάλογοι Ανταλλακτικών
Οδηγίες Λειτουργιάς

(NL) Onderhoudsinstructies
Onderdelenlijst
Bedieningsinstructies

(DK) Servicevejledning
Liste over dele
Betjeningsvejledning

(N) Serviceinstruksjoner
Delelister
Driftsinstruksjoner

(S) Serviceinstruktioner
Reservdelslista
Bruksanvisning

(FIN) Huolto-ohjeet
Osaluettelo
Käyttöohjeet

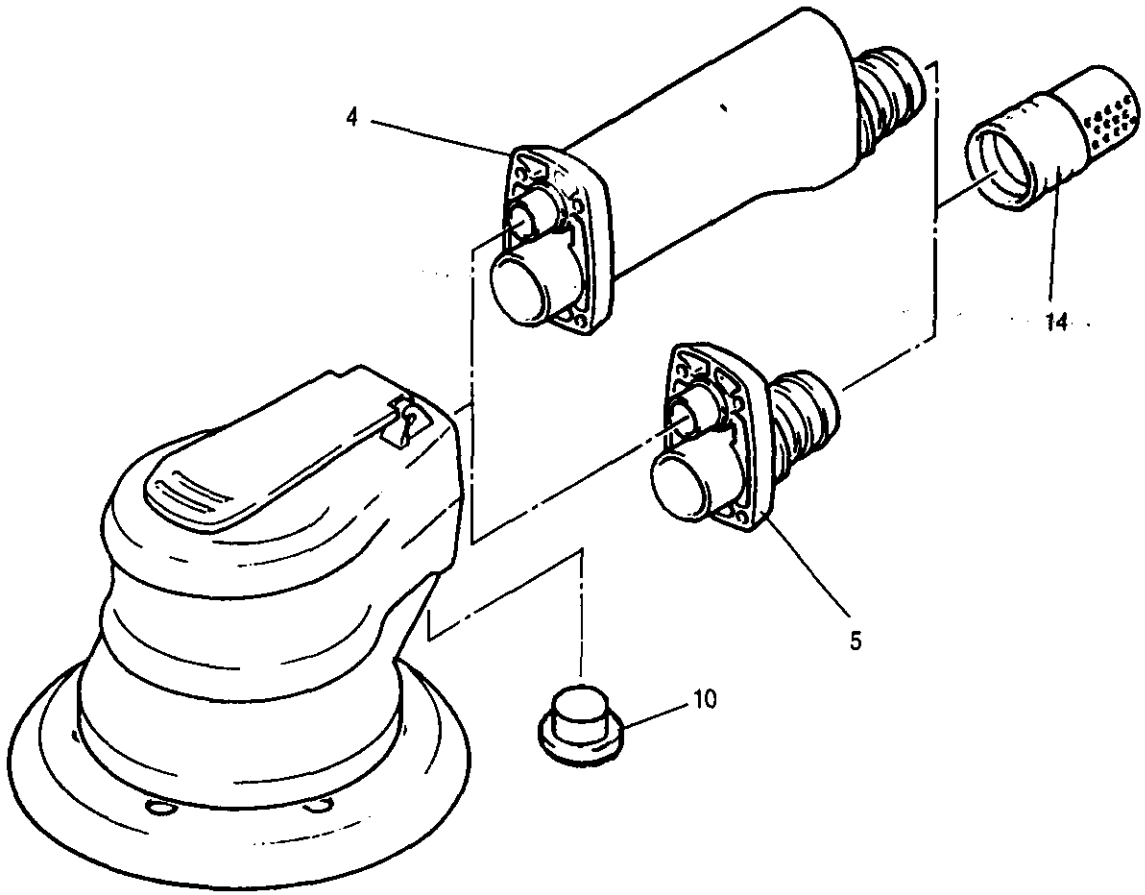

AirToolPro.com by Zampini Industrial Group - Premier Tool Suppliers Since 1987 1-800-353-4676

Desoutter™

DRYLINE™

Desoutter Limited.HP2 7DR UK.

5534/55354/5674/56754

(GB) Servicing Instructions
Parts List
Operating Instructions

(D) Wartungsanleitung
Teileliste
Bedienungsanleitung

(F) Manuel d'entretien
Liste de pièces
Manuel d'utilisation

(E) Instrucciones de Servicio
Listas de Repuestos
Instrucciones de Operación

(P) Instruções de Manutenção
Listas de Peças
Instruções de Funcionamento

(I) Istruzioni per la Manutenzione
Elenco delle Parti
Istruzioni Operative

(GR) Οδηγίες Συντήρησης
Κατάλογοι Ανταλλακτικών
Οδηγίες Λειτουργιάς

(NL) Onderhoudsinstructies
Onderdelenlijst
Bedieningsinstructies

(DK) Servicevejledning
Liste over dele
Betjeningsvejledning

(N) Serviceinstruksjoner
Delelister
Driftsinstruksjoner

(S) Serviceinstruktioner
Reservdelslista
Bruksanvisning

(FIN) Huolto-ohjeet
Osaluettelo
Käyttöohjeet

Model No.	Alpha code
5534	C
55354	C
5674	C
56754	C

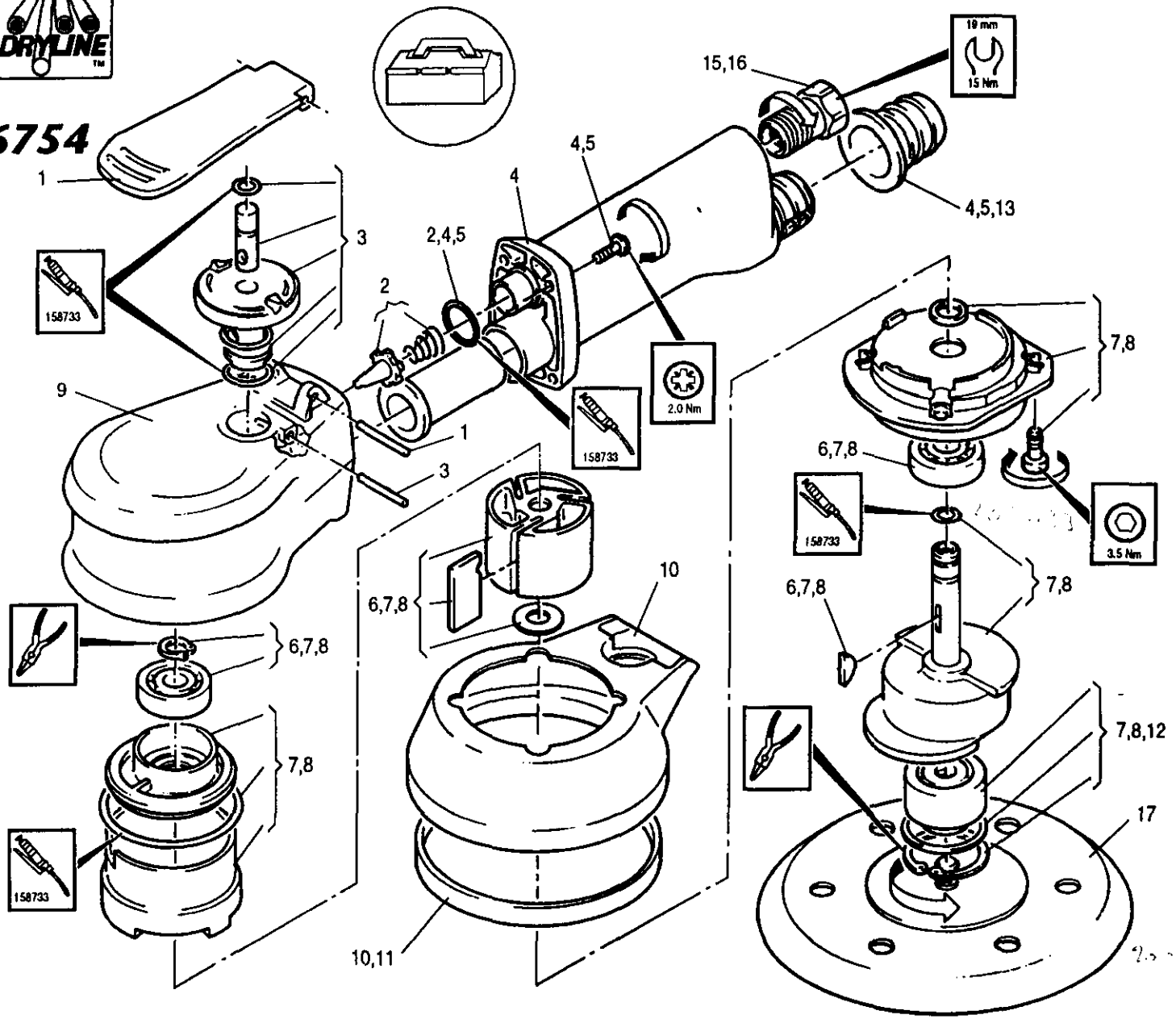

AirToolPro.com by Zampini Industrial Group - Premier Tool Suppliers Since 1987 1-800-353-4676

Desoutter™

Desoutter Limited.HP2 7DR UK.

Item Ps. Nr. No. Article	Part No Teil Nr. Référence	Description Beschreibung Description
1	405673	Lever Kit
2	405713	Valve Service Kit
3	405683	Throttle Service Kit
4	405693	Long Handle Kit
5	405703	Short Handle Kit
*6	405723	Motor Service Kit
7	405733 (5674/56754)	Motor Complete(10mm)
8	405743 (5534/56354)	Motor Complete(5mm)
9	406043	Body
10	405763	Skirt Kit
11	115313	Sealing Brush
12	405773	Hub Bearing Service Kit
13	119473	Rotary Coupling
14	405753	Silencer Kit
15	351563	Air Inlet Bolt (1/4" BSP)
16	351583	Air Inlet Bolt (1/4" NPT)

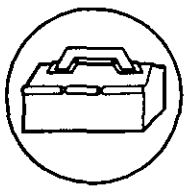

OPTIONAL ACCESSORIES

17. Sanding Pads

Feather edge -Eezer Type

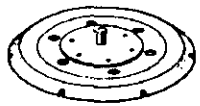

Size	Type	Part No.
Ø127mm(5 in.)	Vinyl Non Vac	52122
Ø127mm(5 in.)	Vinyl Vac 5 Hole	52092
Ø127mm(5 in.)	Velcro Vac 5 Hole	52102
Ø152mm(6 in.)	Vinyl Non Vac	51422
Ø152mm(6 in.)	Velcro Non Vac	51972
Ø152mm(6 in.)	Vinyl Vac 5 Hole	52792
Ø152mm(6 in.)	Velcro Vac 5 Hole	52882

Square edge

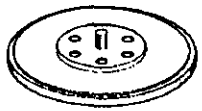

Size	Type	Part No.
Ø152mm(6 in.)	Vinyl Non Vac	50992
Ø152mm(6 in.)	Vinyl Vac	51432

3M Vacuum Pads

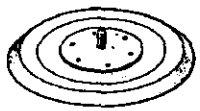

Hookit Pad ®	Ø152mm(6 in.)	101402	Standard
Stikit Pad ®	Ø152mm(6 in.)	103822	Standard
Hookit Pad ®	Ø152mm(6 in.)	104542	Soft
Stikit Pad ®	Ø152mm(6 in.)	103832	Soft

® Hookit and Stikit are the registered trademarks of 3M

GB * Indicates normal replacement items. It is recommended that adequate stocks are held for servicing requirements.
Always quote tool model number, serial number and spare part number when ordering spares.

D * Bedeutet normale Verschleißteile. Es empfiehlt sich eine angemessene Menge für Wartungszwecke auf Lager zu halten.
Bei der Bestullung von Ersatzteilen, bitte immer angeben: Typennummer der Bohrmaschine, Werknummer und Ersatzteilnummer.

F * Le symbole astérisque (*) indique des articles de rechange normaux. Il est recommandé d'en conserver des stocks suffisants pour assurer toutes les opérations d'entretien courant.
Lors de la commande de pièces de rechange, toujours citer le numéro de modèle de l'outillage, son numéro de série et le numéro de référence de chaque pièce de rechange.

E * Indica elementos de reposición regular. Se recomienda tener una cantidad adecuada de los mismos en reserva a efectos de mantenimiento.
Al encargar piezas de recambio, siempre debe indicarse el número de modelo de la herramienta, su número de serie y el número de la pieza de recambio.

P * Indica itens que são substituidos regularmente. É recomendado que estoques adequados sejam mantidos para requisitos de manutenção.
Cite sempre o número do modêlo da ferramenta, número de série, e número da peça accesória quando pedindo acessórios.

I * L'asterisco denota recambi normali. Si consiglia di mantenere scorte adeguate alle esigenze della manutenzione.
Nell'ordinazione di ricambi citare il numero di modello dell'utensile, il numero di matricola e quello di catalogo del pezzo.

GR * Σημαίνει συνηθισμένα είδη (τεμάχια) για αντικατάσταση. Σας συνιστύμε να τηρείτε αρκετό απόθεμα από τα είδη που χρειάζονται αντικατάσταση.
Οταν παραγγέλνετε ανταλλακτικά πάντα να γράφετε τον αριθμό μοντέλου του εργαλείου, τον αριθμό σειράς και τον αριθμό ανταλλακτικού.

NL * Betekent normale reserveartikelen. Het verdient aanbeveling om voldoende voor onderhoudsbehoeften vooradig te hebben.
Bij bestelling van reserveonderdelen geef altijd modelnummer, volgnummer en reserveonderdeelnummer van het werktuig op.

DK * Indikerer normale udskiftningsemner. Det anbefales at have rigelige forsyninger af dele til brug i forbindelse med eftersyn.
Opgiv altid det korrekte værktøjsmodelnummer, serienummer og *reservedelsnummer ved bestilling af reservedele.*

N * Angir normale reservedeler. Det anbefales at tilstrekkelig antall reservedeler holdes på lager.
Ved bestilling av deler må man alltid oppgi verktøyets modellnr., serienr. og reservedelens nr.

S * Utmärker normala reservdelar. Vi rekommenderar att tillräckligt antal lagras för serviceändamål.
Uppge alltid verktygets modellnummer, serienummer samt reservdelens nummer vid beställning av reservdelar.

FIN * Viittaa tavallisiin varaosiin. Suosittelemme, että riittäviä määriä pidetään varastossa huoltotarpeita varten.
Työkalun mallinumero, sarjanumero ja varasosan numero on aina mainittava tilattaessa.

AirToolPro.com by Zampini Industrial Group - Premier Tool Suppliers Since 1987 1-800-353-4676

Desoutter™

Desoutter Limited.HP2 7DR UK.

STATEMENT OF USE

Product is designed for the removal of material by use of abrasives.

GENERAL

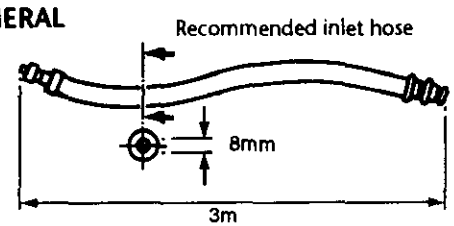

LUBRICATION

158733	= Molykote PG75	273283	= BP FG00EP
208893	= Rocol M204G	27662(5L)	= ISO VG15
273273	= BP Q5618	27652(250ml)	= ISO VG15

DATA

Maximum air pressure Pmax	= 6.3 bar
Sound Pressure Level (dBA)	= 80 ± 2 re. CAGI-PNEUROP PN8NTC1-2
Under load	
Vibration Level (m/sec²)	*= < 2.5 re. ISO 8662*
Weight.	= 1.4kg.

⚠ TOOL MUST NOT BE RUN FREE.

⚠ TOOL MUST ONLY BE RUN WITH A DESOUTTER APPROVED PAD (17).

WARNING

BEFORE OPERATING THIS TOOL, READ AND UNDERSTAND SANDER SAFETY INSTRUCTIONS PART NO.357683

ACCESSORIES

A range of accessories are available and suitable items should be selected from the Desoutter accessories catalogue.

MAINTENANCE INSTRUCTIONS

1 Oil will be expelled from the exhaust of a new tool when the tool is first started. If the tool is to be used in a clean environment the first start should be outside the clean area.
2. Servicing should be carried out at intervals of 1000 hours use.
3. All torque figures ± 10%.
4 Replace as necessary all 'O' rings, bearings and rotor blades, see service kits.
5. ⟲ Iindicates direction of dismantling.
6 When disposing of components, lubricants, etc. ensure that the relevant safety procedures are carried out.

WARNING

THE ROTOR BLADES IN THIS TOOL HAVE A PTFE CONTENT. THE NORMAL HEALTH AND SAFETY RECOMMENDATIONS CONCERNING PTFE MUST BE OBSERVED WHEN HANDLING THESE ROTOR BLADES.

(1) DO NOT SMOKE.

(2) MOTOR COMPONENTS MUST BE WASHED WITH CLEANING FLUID AND NOT BLOWN CLEAR WITH AN AIR LINE.

(3) THE SILENCER MUST BE REPLACED WHEN DIRTY, DO NOT CLEAN AND RE-USE.

(4) WASH HANDS BEFORE COMMENCING ANY OTHER ACTIVITY.

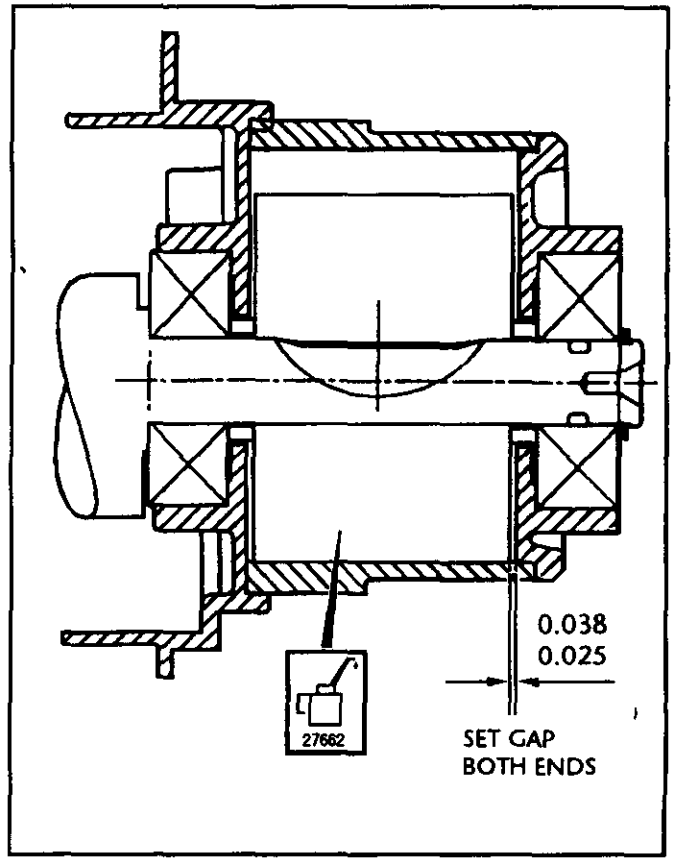

©Copyright 1997, Desoutter, HP2 7DR UK.
All rights reserved. Any unauthorized use or copying of the contents or part thereof is prohibited. This applies in particular to trademarks, model denominations, part numbers and drawings.
Use only authorized parts. Any damage or malfunction caused by the use of unauthorized parts is not covered by Warranty or Product Liability.