Desoutter™

Desoutter Limited, HP2 7DR (UK)

AFD205/215

Servicing Instructions
(GB) Parts List
Operating Instructions
Wartungsanleitung
(D) Teileliste
Bedienungsanleitung
Manuel d'entretien
(F) Liste de pièces
Manuel d'utilisation
Instructions de Servicio
(E) Listas de Repuestos
Instrucciones de Operación
Instruções de Manutenção
(P) Listas de Peças
Instruções de Funcionamento
Instruzioni per la Manutenzione
(I) Elenco delle Parti
Instuzioni Operative
Οδηγίες Συντήρηοης
(GR) *Κοτάλογοι Ανταλλακτικών Μερώ*
Οδηγίες Λειτουργιάς
Onderhoudsinstructies
(NL) Onderdelenlijst
Bedieningsinstructies
Servicevejledning
(DK) Liste over dele
Betjeningsvejledning
Serviceinstruktioner
(N) Delelister
Driftsinstruksjoner
Serviceinstruktioner
(S) Reservdelslista
Bruksanvisning
Huolto-ohjeet
(FIN) Osaluettelo
Käyttöohjeet

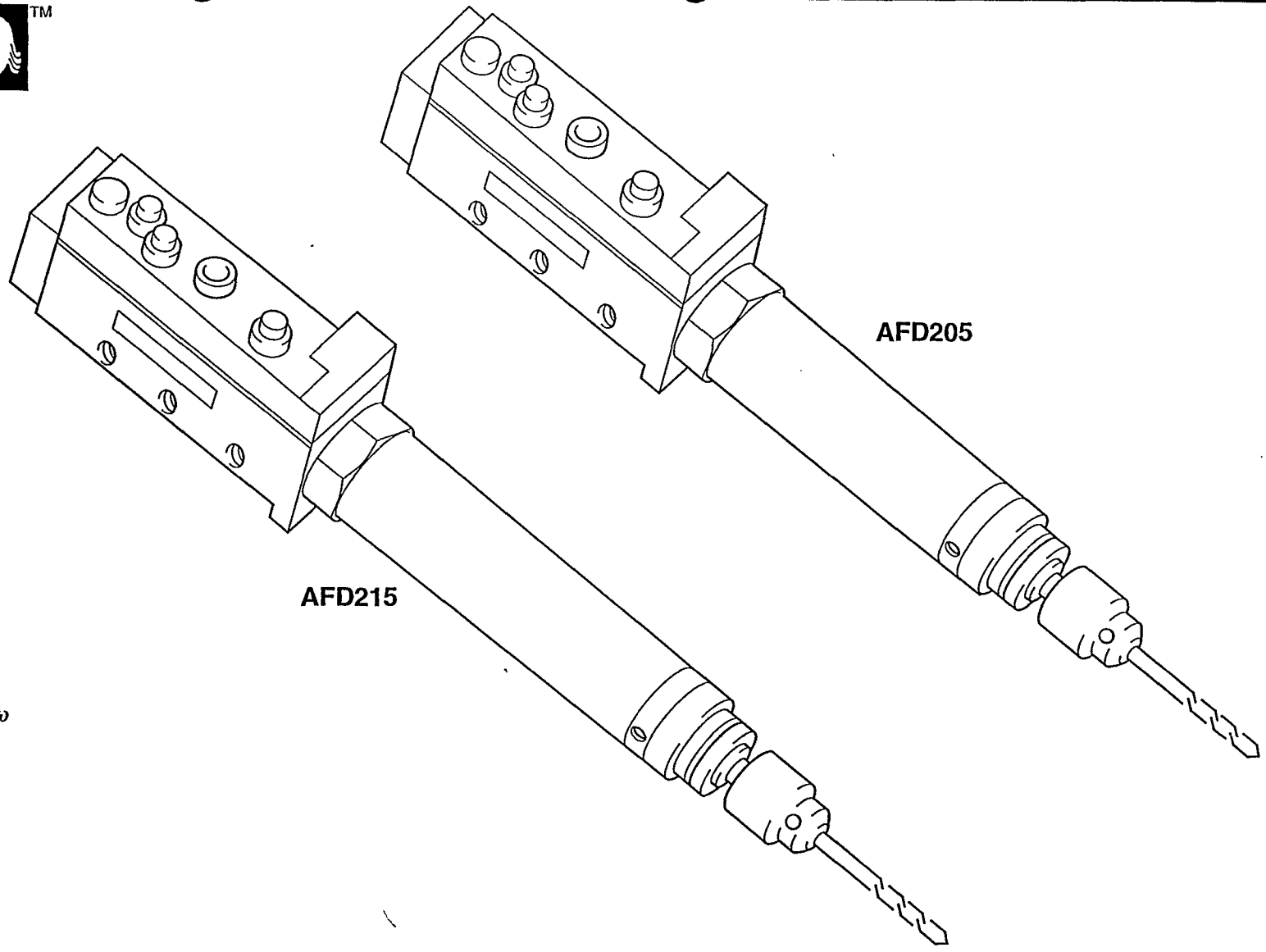

AFD205-18700-434403-C
AFD205-10000-434393-C
AFD205-4350-434383-C
AFD205-2700-434373-C
AFD205-1000-343363-C
AFD205-650-434353-C

AFD215-18700-434343-C
AFD215-10000-434333-C
AFD215-4350-434323-C
AFD215-2700-434313-C
AFD215-1000-434303-C
AFD215-650-434293-C

Desoutter™

Desoutter Limited, HP2 7DR (UK)

AFD205/215

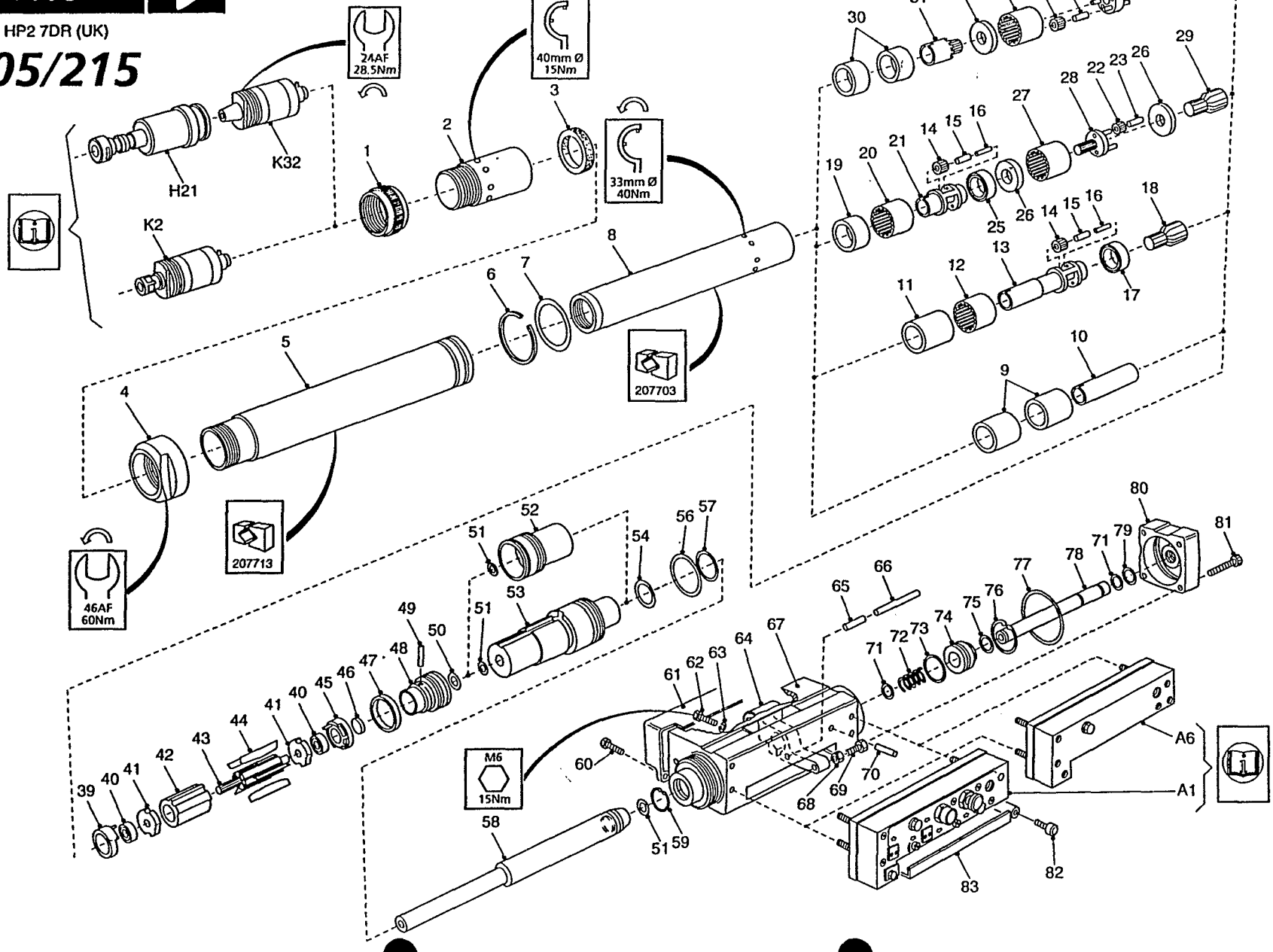

Desoutter™

Desoutter Limited. HP2 7DR (UK)

Adjust Figure 3 (11/13/14) to give the required advance, retract feeds for the operation.

Use Figure 5 (5) for the final depth adjustment.

Lock using Figure 5 (9).

Carry out a set of trial drillings to determine the ideal advance and HCU settings using Figure 3 (11/14).

SETTING TAPPING OPERATION

NOTE: 1. It is important that the advance rate of the tool is set to match the pitch of the thread which is to be tapped. An incorrect advance rate will result in a deformed thread, this will be more noticeable in plastics or light alloy materials.

2. The retract rate should be set to withdraw the tap at a slightly faster rate than it advanced, this will ensure a clean withdrawal.

Mount a tool, with the selected tap securely retained in the chuck, above a test block to carry out sample tapping operations.

The end of the tap MUST be at least 14mm (9/16in) above the test block, to allow for the tapping head reversing engagement travel. Set the gap between Figure 5 (2) and (1) to equal the tapping depth PLUS the distance the tap is above the work piece.

Adjust Figure 3 (11/13/14) to give the required advance, retract feeds for the operation.

Carry out a trial tapping operation and inspect the finished thread form, adjust as necessary Figure 3 (11/13/14) and repeat until information in NOTES 1 and 2 are satisfied.

SERVICING REQUIREMENTS

General Notes

Use the following lubricants:

Grease - Molykote Longterm W2 for splines and guide rod.
Grease - Duckhams Type Q5618 for gears.
Grease - Molykote PG75 Plastislip for O-Rings.
Grease - BP FG00EP for bearings.

Cleaning

Requirements:

(1) Container to immerse components.

(2) Good quality clean paraffin.

Soak the components in the container containing the paraffin. Ensure full immersion, agitate components to ensure that air passages are flushed through. Remove components from the container, thoroughly dry and blow through air passages to remove moisture. Place components in an air tight container until required for assembly. Dispose of the dirty paraffin in accordance with health and safety regulations.

MAINTENANCE

It is recommended that the tool is serviced at 1000hrs running time.

Dismantle the tool using the exploded view. Clean all components and inspect for wear or damage, exchange if necessary. Apply new lubricant to the relevant parts in accordance with list. Replace the front seal after dismantling tool. Assemble the tool using the exploded view.

Torque values given are ±5%.

Special tools shown in exploded view are in addition to normal workshop tools.

NOTE: Protective gloves and eye protection should be worn during cleaning of parts. Eating or smoking is prohibited when cleaning, dismantling or assembling tool.

Worn components should be carefully handled and disposed of safety.

Use only authorized parts. Any damage or malfunction caused by the use of unauthorized parts is not covered by Warranty or Product Liability.

Desoutter™

Desoutter Limited. HP2 7DR (UK)

†8 Position for 'S2' Solenoid Valve for Electric Emergency Retract.

†9 Position for 'SW2' Proximity Switch, detects a signal at the end of a cycle for interface kit connection (i.e. it is High at depth.

10 Stroke Control Valve.

11 Feed Rate Regulating Screw.

†12 Position for 'S1' Solenoid Valve for Electric Start.

13 Retract Rate Regulating Screw.

14 Advance rate regulating Screw.

15 'O' port, tapped 1/8in BSP receives signal to return the feed to start position for peck feed or Dwell control.

†16 Position for 'SW1' Proximity Switch, detects a signal at the beginning of a cycle for interface kit connection. (i.e. is High in datum position).

17 'M' port, is tapped M5. Used for sequence control. The signal is produced when the tool is at rest.

NOTE: The 'M' port is intended for the operation of pilot valves. It must not be used as a source of air supply for other uses.

† Available in KIT form. See Desoutter Catalogue for details.

Control Valve Block Module - Basic (Figure 4)

This control valve block module is used when the tool is to be controlled remotely. Figure 4 details the signal originations.

NOTE: External circuitry will be required to control the speed of advance and retract feeds.

LOCATION

1a. Position for SW1 proximity switch, using actuating pin.

1b Position for SW1 proximity switch, using sleeve on extension tube..

Both 1a and 1b detects a signal when the tool is at the datum position.

2. Position for SW2 proximity switch, detects a signal when the tool has reached depth.

3. Retract Air port, tapped 1/8 in. BSP.

4. Advance Air port, tapped 1/8 in. BSP

NOTE: When using simple control block replace screw (36) with extended head screw (383983).

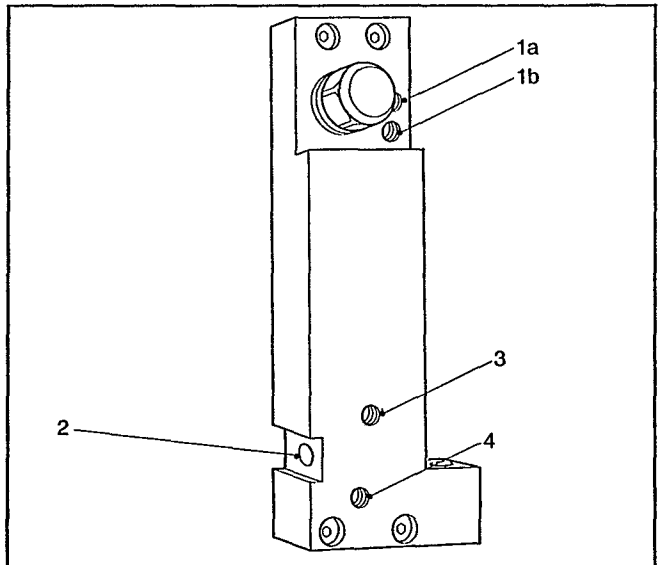

FIGURE 4 VALVE BLOCK MODULE

Accessories

Mounting Clamps - A range of clamps bases and columns are available. Full details obtained from Desoutter.

Hydraulic Check Unit (HCU) - The tool will function satisfactorily, when drilling a blind hole at the set feed rate. Should it be required to break through the material and possibly through into another hole, feed acceleration will occur with possible drill breakage. To obviate this, the fitment of an HCU is strongly recommended. Request information from Desoutter.

Peck Feed Drills - The Desoutter Peck Feed Drill System should be used when the depth of the hole to be drilled is five or more times the hole diameter. This helps clear drill chips and avoids excessive overheating of drill bit. Hole size accuracy can be improved and drill bit run-out can be kept to the minimum. Request information from Desoutter.

SETTING DRILLING OPERATION (See Figure 5)

The drill must be at least 6mm (0.25in) above the work piece.

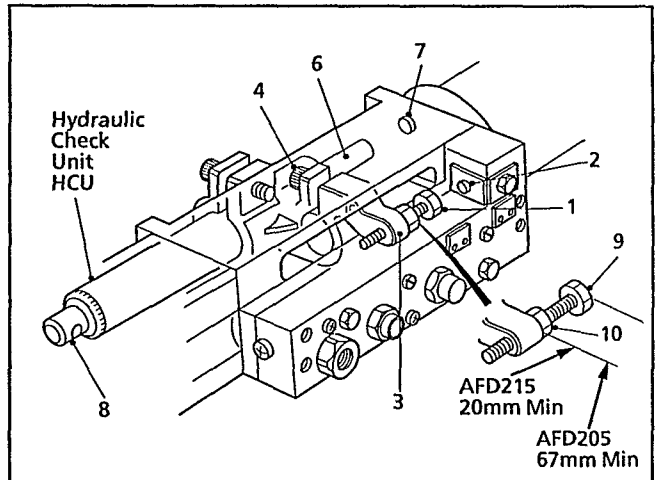

FIGURE 5 HYDRAULIC CHECK UNIT (HCU)

NOTE: This setting details a unit with a HCU, reference to the HCU should be ignored when setting the standard tool.

Set the gap between the (1) and (2) to equal the depth of drilling required PLUS the distance the bit is above the work piece, by sliding (3). Lock in position with (4) to the recommended torque.

Position the HCU in (3). Set the gap between (6) and (7) to a distance as required above the work piece.

Unscrew (8) away from the HCU to adjust the resistance within the HCU to the minimum.

Fully open the Figure 3 (13).

Close Figure 3 (11/14).

Connect the air supply and press Figure 3 (6).

Desoutter™

Desoutter Limited. HP2 7DR (UK)

OPERATORS INSTRUCTIONS

Air Supply - Main

A water free and filtered air supply is required, at a pressure of 6.3 bar (91.4 psig), with a flow rate of 9.9l/s (21cu.ft/min) controlled by a pressure regulator selected from the Desoutter Air Line Service Equipment Catalogue.

Air Supply - Remote

The basic requirements are as above but the pressure must be at least 2.7bar (40 psig) and the flow requirement when signalling is 0.47 l/s (1cu.ft/min). The signal duration should be kept to the minimum to reduce air consumption.

DATA

Maximum air pressure Pmax = 8bar
Minimum air pressure Pmin = 6bar
Sound pressure level = 80 ± 2 dBA
(CAGI-PNEUROP Test Code)
Weight = 4.2kg

Lubrication

Correct lubrication is vital for maximum performance of the tool and an airline lubricator selected from the Desoutter Air Line Service Equipment Catalogue should be fitted into the system down stream of the filter.

Desoutter recommend the use of an ISO Viscosity Classified oil, grade number ISO VG 15, in the lubricator (0.050/cycle).

Statement of Use

The tool is designed for drilling holes, but may be adapted for other specified purposes, using Desoutter approved accessories.
No other use permitted.

NOTE: Provision must be made for an Emergency Stop if the tool is used alone or built into a machine. A suitable circuit diagram for manufacturing an Emergency Stop is provided in Figure 2.

WARNING:

(1) ALWAYS DISCONNECT THE TOOL FROM THE AIR SUPPLY BEFORE ATTEMPTING ANY REPLACEMENT, ADJUSTING, SERVICING OR DISMANTLING.

(2) ENSURE THAT NO LOOSE ARTICLES OF CLOTHING, LOOSE HAIR OR CLEANING MATERIAL CAN BE CAUGHT BY THE ROTATING PARTS OF THE TOOL.

(3) ALWAYS ALLOW THE TOOL TO STOP BEFORE REMOVING THE WORK.

(4) ENSURE THAT THE WORK PIECE IS SECURELY CLAMPED BEFORE COMMENCEMENT OF OPERATION.

(5) CLEAR ALL LOOSE ITEMS FROM VICINITY.

(6) ENSURE THAT THE TOOL IS SECURELY CLAMPED AROUND THE OUTER CASE BEFORE COMMENCEMENT OF OPERATION.

(7) ENSURE THAT SAFETY GUARDS ARE FITTED.

(8) BEWARE OF TOOL OUTPUT. THIS ADVANCES AND ROTATES.

(9) EYE AND EAR PROTECTION MUST BE WORN WHEN OPERATING THE TOOL.

(10) DO NOT OPERATE THE TOOL IN EXPLOSIVE ATMOSPHERES.

(11) WHEN MACHINING HAZARDOUS MATERIALS, PROVISION MUST BE MADE FOR DUST COLLECTION OR SUPPRESSION.

(12) ENSURE THAT AN EMERGENCY STOP IS PROVIDED FOR THE TOOL, WHETHER USED ALONE OR BUILT INTO A MACHINE. A SUITABLE EMERGENCY STOP CIRCUIT IS DETAILED IN FIGURE 2.

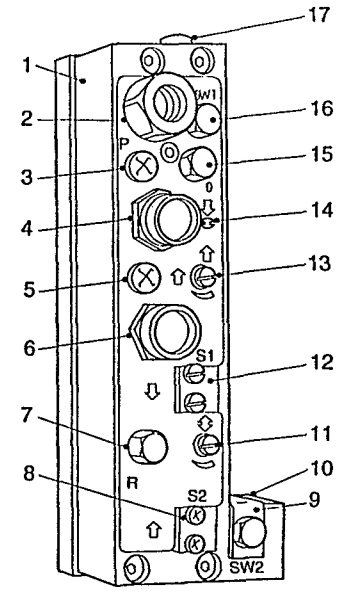

FIGURE 3 VALVE BLOCK MODULE COMPLETE

CONTROL VALVE (FIGURE 3)

The valve block module complete (1) contains all the control functions and signal originations for external control.

The controls and locations are identified below and detailed in the Drilling operation.

LOCATION:

2 Main Air Inlet port, tapped in BSP or NPT.

3 'P' Input port, tapped M5. Signal point for peck feed or Dwell control kit circuit.

4 Manual Retract Button (Red).

5 'I' Remote Start Input port, tapped M5. Receives external signal to start the tool cycle.

6 Manual Start Button (Green).

7 'R' Retract Output port, tapped 1/8in BSP. Second external retract signal.

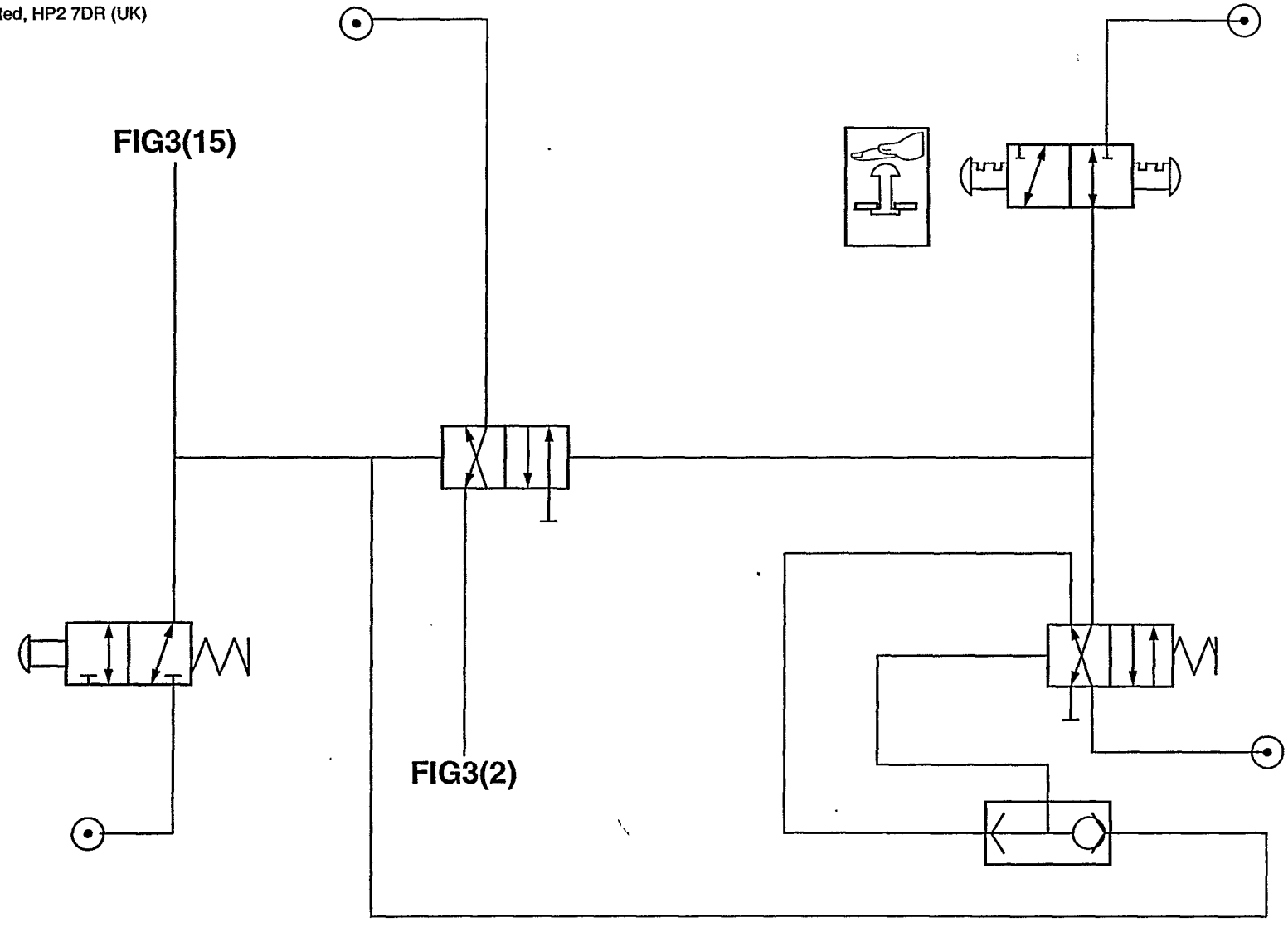

FIGURE 2

Desoutter™

Desoutter Limited, HP2 7DR (UK)

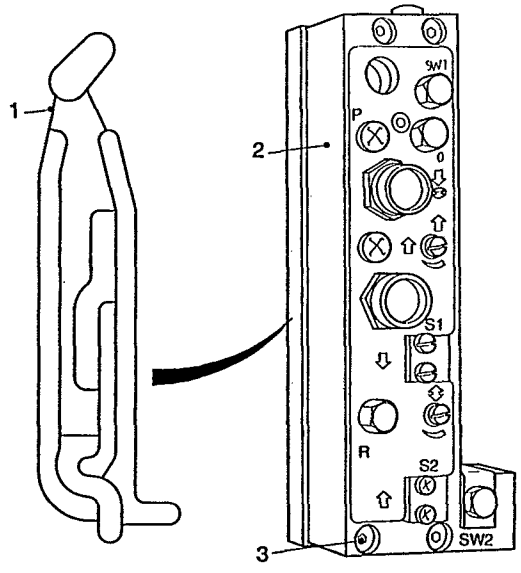

436313-A1

Item No. Pos. Nr. No. Article	Part No. Teil. Nr. Référence	Description	Qty Menge Qté
1	370393	Seal	1
2	436313	Block	1
3	273653	Screw	4
		Service kit	
-	370943	Seal Kit	1
		Adaptor Kit	
	444513	BSP/NPT	1

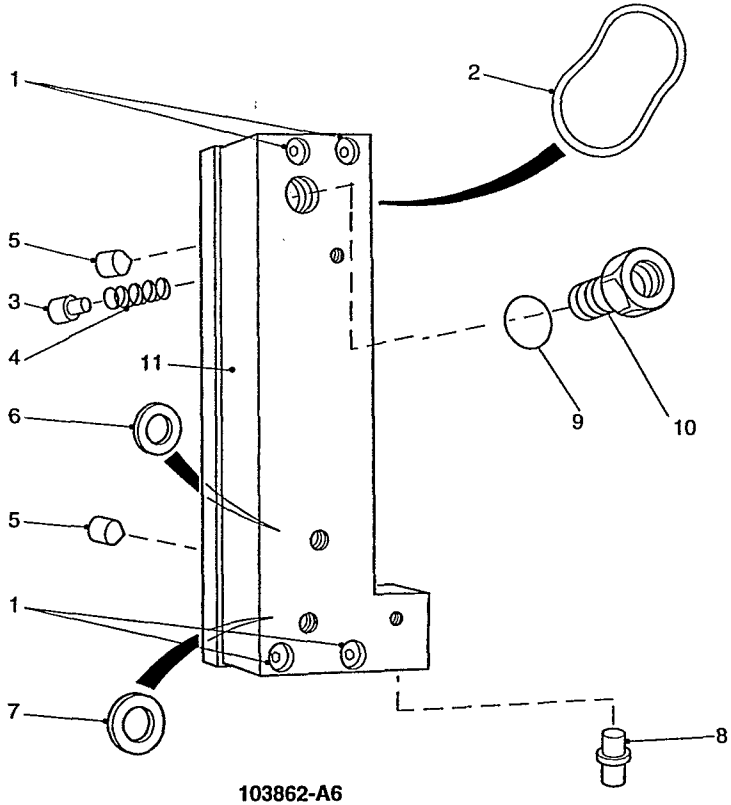

103862-A6

Item No. Pos. Nr. No. Article	Part No. Teil. Nr. Référence	Description	Qty Menge Qté
1	236373	Screw	4
*2	64093	O-Ring	1
3	318243	Pin	1
4	51863	Spring	2
5	325073	Pin	2
*6	113413	O-Ring	1
*7	200713	O-Ring	1
8	395493	Pin	1
9	99853	O-Ring	1
10	42953	Air Inlet	1
11	381193	Block	1

Output Modules/Modules de Sortie/Ausgabemodule

Desoutter™

Desoutter Limited, HP2 7DR (UK)

357193-H21

Item Ps. Nr. No. Article	Part No. Teil Nr. Référence	Description	Qty
1	79783	Screw	1
2	29452	Chuck	1
3	57003	Screw	3
4	62153	Housing	1
5	62293	Spring	1
6	62143	Housing	1
7	68828	Cage and Balls	1
8	68818	Outer Race	1
9	61553	Cage	1
10	10753	Pin	2
11	502093	Bearing	2
12	1443	Wheel	2
13	10713	Pinion	1
14	10703	Gear	1
15	77753	Spindle	1
16	263403	Circlip	1
17	1483	Bearing	1
18	263703	Coupling	1
19	257733	Case	1
20	263713	Adaptor	1

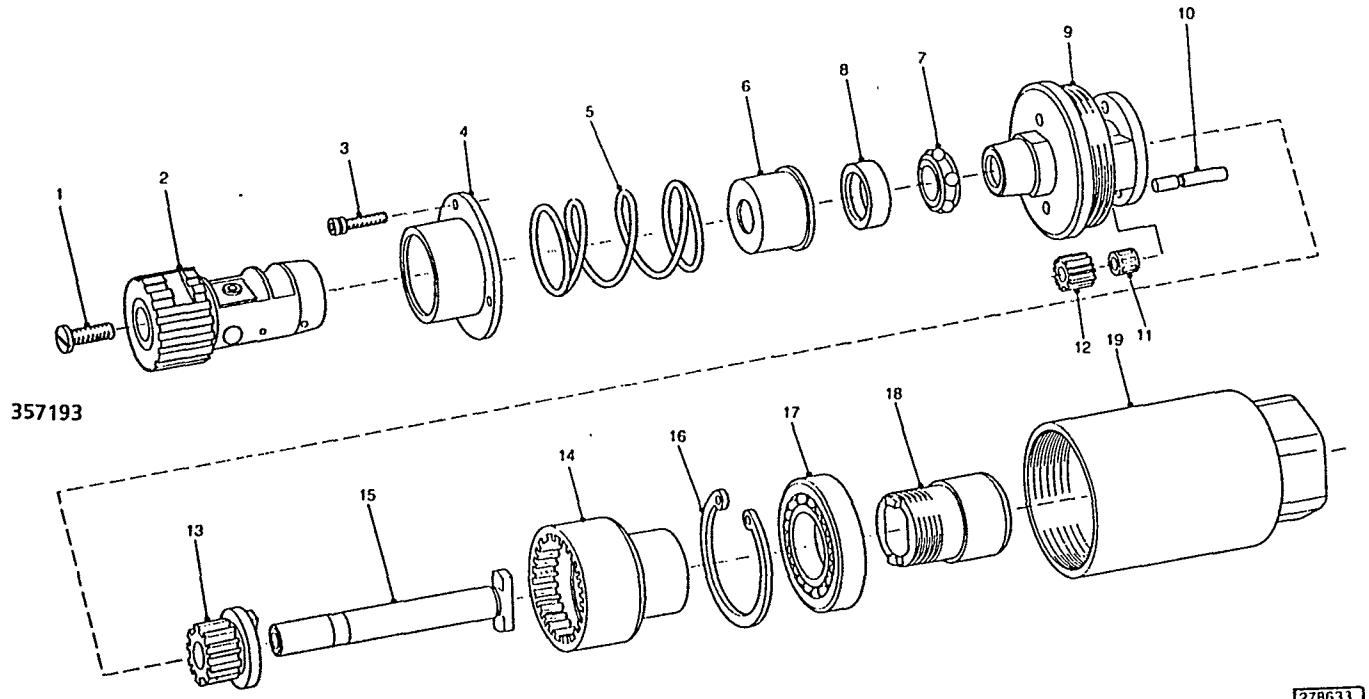

357193-K35

Item Ps. Nr. No. Article	Part No. Teil Nr. Référence	Description	Qty
1	64888	Screw	1
2	355703	Shaft	1
3	382983	Pin	1
4	357213	Nut	1
5	370893	Bearing	2
6	204773	Circlip	1
7	355733	Spacer	1
8	202323	O-ring	1
9	323843	Screw	1

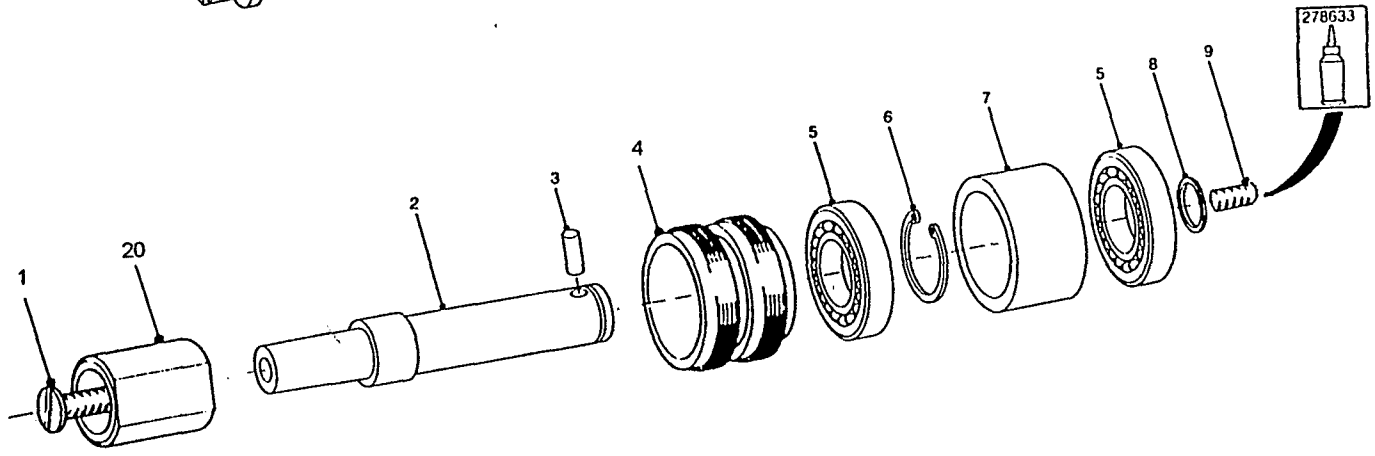

Desoutter™

Desoutter Limited, HP2 7DR (UK)

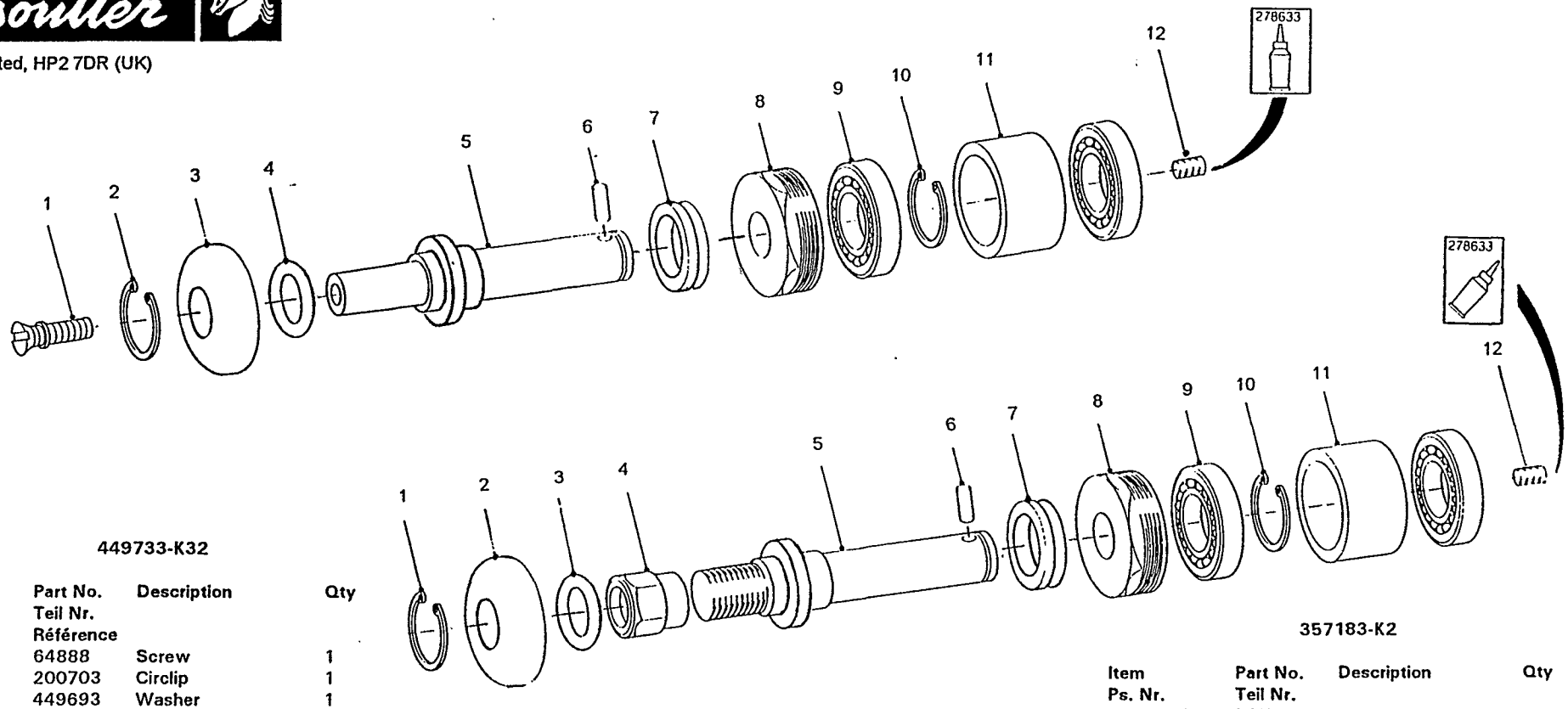

449733-K32

Item Ps. Nr. No. Article	Part No. Teil Nr. Référence	Description	Qty
1	64888	Screw	1
2	200703	Circlip	1
3	449693	Washer	1
4	177653	O-ring	1
5	449723	Shaft	1
6	382983	Pin	1
7	454413	Seal	1
8	355713	Nut	1
9	370893	Bearing	2
10	204773	Circlip	1
11	355733	Spacer	1
12	323843	Screw	1

357183-K2

Item Ps. Nr. No. Article	Part No. Teil Nr. Référence	Description	Qty
1	200703	Circlip	1
2	449693	Washer	1
3	177653	O-ring	1
4	116803	Nut	1
5	449693	Shaft	1
6	382983	Pin	1
7	454413	Seal	1
8	355713	Nut	1
9	370893	Bearing	2
10	204773	Circlip	1
11	355733	Spacer	1
12	323843	Screw	1

Desoutter™

Desoutter Limited. HP2 7DR (UK)

* Indicates normal replacement items. It is recommended that adequate stocks are held for servicing requirements.

Always quote tool model number, serial number and spare part number when ordering spares.

* Bedeutet normale Verschleißteile. Es empfiehlt sich eine angemessene Menge für Wartungszwecke auf Lager zu halten.

Bei der Bestellung von Ersatzteilen, bitte immer angeben: Typennummer der Bohrmaschine, Werknummer und Ersatzteilnummer.

* Le symbole astérisque (*) indique des articles de rechange normaux. Il est recommandé d'en conserver des stocks suffisants pour assurer toutes les opérations d'entretien courant.

Lors de la commande de pièces de rechange, toujours citer le numéro de modèle de l'outillage, son numéro de série et le numéro de référence de chaque pièce de rechange.

* Indica elementos de reposición regular. Se recomienda tener una cantidad adecuada de los mismos en reserva a efectos de mantenimiento.

Al encargar piezas de recambio, siempre debe indicarse el número de modelo de la herramienta, su número de serie y el número de la pieza de recambio.

* Indica itens que são substituidos regularmente. É recomendado que estoques adequados sejam mantidos para requisitos de manutenção.

Cite sempre o número do modêlo da ferramenta, número de série, e número da peça accesória quando pedindo acessórios.

* L'asterisco denota ricambi normali. Si consiglia di mantenere scorte adeguate alle esigenze della manutenzione.

Nell'ordinazione di ricambi citare il numero di modello dell'utensile, il numero di matricola e quello di catalogo del pezzo.

* Σημαίνει συνηθισμένα είδη (τεμάχια) για αντικατάσταση. Σας συνιστούμε να τηρείτε αρκετό απόθεμα από τα είδη που χρειάζονται αντικατάσταση.

Οταν παραγγέλνετε ανταλλακτικά πάντα να γράφετε τον αριθμό μοντέλου του εργαλείου, τον αριθμό σειράς και τον αριθμό ανταλλακτικού.

* Betekent normale reserveartikelen. Het verdient aanbeveling om voldoende voor onderhoudsbehoeften voorradig te hebben.

Bij bestelling van reserveonderdelen geef altijd modelnummer, volgnummer en reserveonderdeelnummer van het werktuig op.

* Indikerer normale udskiftningsemner. Det anbefales at have rigelige forsyninger af dele til brug i forbindelse med eftersyn.

Opgiv altid det korrekte værktøjsmodelnummer, serienummer og reservedelsnummer ved bestilling af reservedele.

* Angir normale reservedeler. Det anbefales at tilstrekkelig antall reservedeler holdes på lager.

Ved bestilling av deler må man alltid oppgi verktøyets modellnr., serienr. og reservedelens nr.

* Utmärker normala reservdelar. Vi rekommenderar att tillräckligt antal lagras för serviceändamål.

Uppge alltid verktygets modellnummer, serienummer samt reservdelens nummer vid beställning av reservdelar.

* Viittaa tavallisiin varaosiin. Suosittelemme, että riittäviä määriä pidetään varastossa huoltotarpeita varten.

Työkalun mallinumero, sarjanumero ja varasosan numero on aina mainittava tilattaessa.

Parts List/Teilelliste/Liste de Pièces

Desoutter™

Desoutter Limited. HP2 7DR (UK)

Item No. Pos. Nr. No. Article	Part No. Teil. Nr. Référence	Description	Qty Menge Qté
1	302413	Protector	1
2	355683	Nose	1
3	200843	Silencer	1
4	355693	Nut	1
5	376453	Outer case (AFD205)	1
	355653	Outer case (AFD215)	1
6	355863	Circlip	1
7	299493	O-ring	1
8	376453	Case (AFD205)	1
	355673	Case (AFD215)	1
9	312303	Spacer	2
10	355753	Coupling, 18700	1
11	162333	Spacer	1
12	299163	Gear ring	1
13	355723	Planet cage - 4350	1
	355743	Planet cage - 2700	1
14	299093	Planet wheel - 4350, 1000, 650	3
	299113	Planet wheel - 2700	3
15	298893	Bearing - 4350, 1000, 650	3
	251663	Bearing - 2700	3
16	161373	Pin - 4350, 1000, 650	3
	251503	Pin - 2700	3
17	299183	Bearing	1
18	306473	Pinion - 4350	1
19	206163	Spacer	1
20	299163	Gear ring - 1000, 650	1
21	357163	Planet cage - 1000, 650	1
22	299093	Planet wheel - 1000	3
	299113	Planet wheel - 650	3
23	298893	Bearing	3
24	288273	Pin	3
25	299183	Bearing	1
26	306303	Washer	2
27	306313	Gear ring - 1000, 650	1
28	306693	Planet carrier - 1000	1
	306703	Planet carrier - 650	1
29	306543	Pinion - 1000	1
30	206163	Spacer	2
31	355773	Coupling, 10000	1
32	306303	Washer	2
33	266483	Gearing, 10000	1
34	299083	Planet wheel	3
35	298893	Bearing	3
36	293443	Planet carrier	1
37	299113	Planet wheel	3
38	251663	Bearing	3
39	304683	Housing	1
40	33433	Bearing	2
41	254873	Plate	2
42	254853	Cylinder	1
43	258763	Rotor - 18700	1
	266553	Rotor - 10000, 650	1
	306513	Rotor - 4350	1
	299213	Rotor - 2700	1
	306503	Rotor - 1000	1
44	36613	Blade	5
45	254913	Housing	1
46	254903	Cap	1
47	355833	Seal	1
48	355663	Piston	1
49	228983	Pin	1
50	202313	O-ring	1
51	323393	Seal	2
52	376443	Cylinder (AFD205)	1
53	355643	Cylinder (AFD215)	1
54	355843	Seal	1
55			1
56	347633	O-ring	2
57	200763	O-ring	1
58	376433	Tube (AFD205)	1
	355633	Tube (AFD215)	1
59	322603	Circlip	1
60	236373	Screw	2
61	325103	Cover	1
62	228003	Screw	2
63	6512	Washer	1
64	394533	Crosshead	1
65	381673	Bush	1
66	381683	Rod	1
67	394433	Housing	1
68	223203	Nut	1
69	380023	Screw (AFD205)	1
	322493	Screw (AFD215)	1
70	432743	Pin	1
71	323413	Circlip	2
72	327093	Spring	1
73	323473	O-ring	1
74	322733	Plate	1
75	323483	O-ring	1
76	323383	Circlip	1
77	188893	O-ring	1
78	376423	Tube (AFD205)	1
	322713	Tube (AFD215)	1
79	323493	O-ring	1
80	322723	Cap	1
81	223133	Screw	4
82	216683	Screw	1
83	326653	Cover	1

D

Desoutter™

Desoutter Limited. HP2 7DR (UK)

BEDIENUNGSANLEITUNG

Druckluftversorgung - Hauptstrom

Für den Betrieb ist wasserfreie und gefilterte Druckluft mit einem Druck von 6,3 Bar (91,4 Psig) mit einem Durchsatz von 9,9 l/s (21 Fuß³/min) erforderlich, mit einer Regelung durch einen Druckregler gemäß Katalog Desoutter der Drucklufteinrichtungen.

Druckluftversorgung - Nebenstrom

Es gelten die gleichen Grundanforderungen wie oben, jedoch müssen der Druck mindestens 2,7 Bar (40 Psig) und der Durchsatz bei Signalisierung 0,47 l/s (1 Fuß³/min) betragen. Die Signaldauer soll möglichst gering sein, um den Druckluftverbrauch zu beschränken.

DATEN

Luftdruck maximal Pmax = 8 Bar
Luftdruck minimal Pmin = 6 Bar
Schalldruckpegel = 80 ± 2 dBA
(Testcode CAGI-PNEUROP)
Gewicht = 4,2 kg

Schmierung

Im Interesse maximaler Leistungsfähigkeit des Werkzeugs ist auf einwandfreie Schmierung zu achten. Das System soll hinter dem Filter einen Miniaturluftöler gemäß Katalog Desoutter der Drucklufteinrichtungen enthalten.

Desoutter empfiehlt, im Luftöler ein Öl mit ISO-Viskositätsklassifizierung zu verwenden, Sorte ISO VG 15 (0.05ml/zyklus).

Verwendungsangabe

Das Werkzeug ist für das Bohren von Löchern vorgesehen, kann aber auch für andere spezifizierte Zwecke umgerüstet werden. Hierzu ist von Desoutter freigegebenes Zubehör zu verwenden. Andere Verwendung nicht zulässig.

ANMERKUNG: Es ist eine Notabschaltvorrichtung vorzusehen, wenn das Werkzeug allein verwendet oder in eine Maschine eingebaut wird. Abbildung 2 zeigt einen geeigneten Schaltplan für die Einrichtung einer Notabschaltvorrichtung.

ACHTUNG:

(1) VOR DER DURCHFÜHRUNG VON AUSTAUSCH-, EINSTELL-, WARTUNGS- ODER AUSBAUARBEITEN IMMER DRUCKLUFTVERSORGUNG DES WERKZEUGS UNTERBRECHEN.

(2) DARAUF ACHTEN, DASS SICH KEINE LOSE HÄNGENDEN KLEIDUNGSSTÜCKE, HAARE ODER REINIGUNGSMATERIALIEN IN DEN ROTIERENDEN TEILEN DES WERKZEUGS FANGEN KÖNNEN.

(3) VOR DER ENTNAHME DES WERKSTÜCKS IMMER ERST VOLLSTÄNDIGEN STILLSTAND DES WERKZEUGS ABWARTEN.

(4) VOR BEGINN DER BEARBEITUNG DARAUF ACHTEN, DASS DAS WERKSTÜCK SICHER EINGESPANNT IST.

(5) ENTFERNEN SIE ALLE LOSEN TEILE AUS DER UNMITTELBAREN UMGEBUMG.

(6) VOR BEGINN DER BEARBEITUNG IST SICHERZUSTELLEN, DASS DAS WERKZEUG SICHER AM AUSSENGEHÄUSE EINGESPANNT IST.

(7) DARAUF ACHTEN, DASS DIE SICHERHEITSABDECKUNGEN EINGEBAUT SIND.

(8) VORSICHT AN DER AUSGABESEITE DES WERKZEUGS. DIESES TEIL FÄHRT VOR UND ROTIERT.

(9) BEI DER BEDIENUNG DES WERKZEUGS SIND AUGEN- UND GEHÖRSCHUTZ ZU TRAGEN.

(10) WERKZEUG NICHT IN EXPLOSIONSGEFÄHRDETER ATMOSPHÄRE BETREIBEN.

(11) BEI DER BEARBEITUNG VON GESUNDHEITSGEFÄHRLICHEN MATERIALIEN MÜSSEN EINRICHTUNGEN VORHANDEN SEIN, DIE STAUB ABSAUGEN ODER EINE STAUBENTWICKLUNG VERHINDERN.

(12) FÜR DAS WERKZEUG IST FÜR DEN SELBSTÄNDIGEN EINSATZ WIE FÜR DEN EINBAU IN EINE MASCHINE IMMER EINE NOTABSCHALTVORRICHTUNG VORZUSEHEN. ABBILDUNG 2 ZEIGT EINE GEEIGNETE NOTABSCHALTEINRICHTUNG.

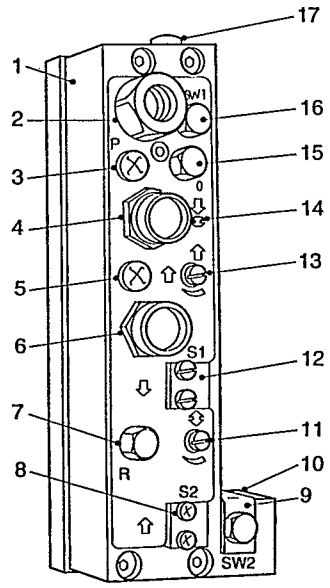

ABBILDUNG 3 VENTILBLOCKMODUL KOMPLETT

STEUERVENTIL (ABBILDUNG 3)

Das Ventilblockmodul komplett (1) enthält alle Steuerfunktionen und Signalgeber für eine externe Steuerung.

Die einzelnen Steuerelemente bzw. Einbauorte werden nachfolgend angegeben und in der Erläuterung des Bohrbetriebs näher beschrieben.

EINBAUORTE:

2 Hauptdruckluftanschluß, Gewinde 1/4" BSP oder NPT

3 Eingangsanschluß "P", Gewinde M5. Signalanschlußpunkt für die Stoßzuführung oder die Schaltung der Haltesteuerung.