Desoutter

AFD22

ervicing Instructions
perating Instructions (GB)
arts List
artungsanleitung
eileliste
edienungsanleitung
anuel d'entretien
ste de pièces (F)
anuel d'utilisation
strucciones de Servicio
stas de Repuestos (E)
strucciones de Operación
struções de Manutenção
stas de Peças (P)
struções de
ncionamento
truzioni per la
anutenzione
enco delle Parti (I)
truzioni Operative
ηγίες Συντήρησης (GR)
τάλογοι Ανταλλακτικών Μέρω
ηγίες Λειτουργίας
nderhoudsinstructies
nderdelenlijst (NL)
dieningsinstructies
rvicevejledning
ste over dele (DK)
tjeningsvejledning
rviceinstruksjoner
delister (N)
iftsinstruksjoner
rviceinstruktioner
servdelslista (S)
uksanvisning
olto-ohjeet
aluettelo (FIN)
yltöohjeet

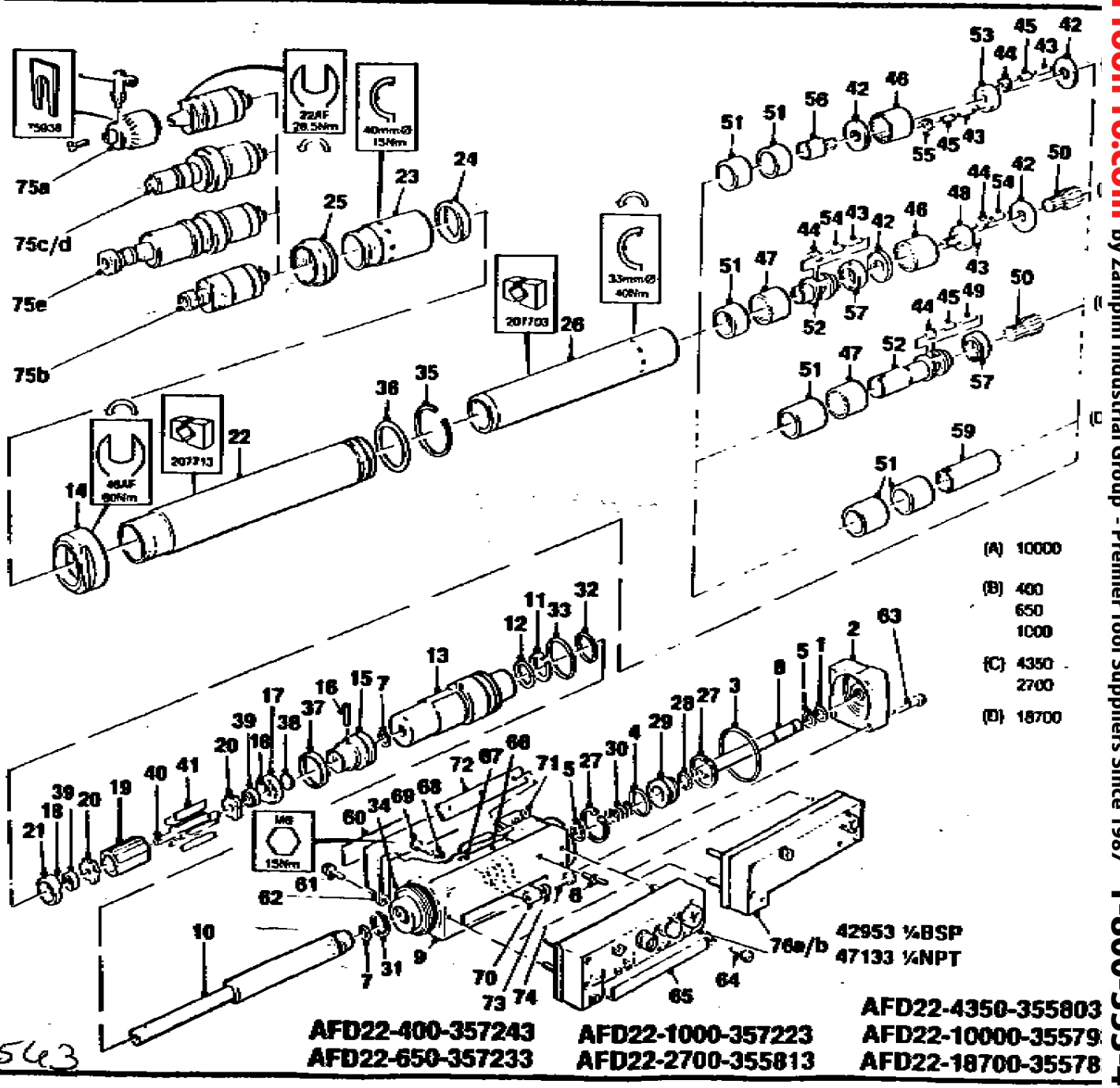

Seal 3675463

Support Tool

Part No. 357253 Issue 2 4

AirToolPro.com by Zampini Industrial Group - Premier Tool Suppliers Since 1987 1-800-353-4676

Parts List/Teileliste/Liste de Pièces

Item No. Pos Nr. No. Article	Part No. Teil. Nr. Pièce No	Qty Menge Qté
1	323493	1
2	322723	1
*3	188893	1
*4	323473	1
*5	323413	2
6	322193	1
*7	323393	2
8	322713	1
9	355763	1
10	355633	1
11	355853	1
*12	355643	1
13	355643	1
14	355693	1
15	355663	1
16	228983	1
17	254913	1
*18	256123	2
19	254853	1
20	254873	2
21	254893	1 — use 304623
22	355653	1
23	355683	1
24	200843	1
25	302413	1
26	355673	1
*27	323383	2
*28	323483	1
29	322733	1
30	327093	1
31	322603	1
32	200763	1
33	347633	1
34	322393	1
35	355663	1
36	299493	1
37	355833	1
38	254903	1
39	30433	2
40	266553	1
	(357243)	
	(357233)	
	(355793)	
	306503	1
	(357223)	
	306513	1
	(355803)	

Item No. Pos Nr. No. Article	Part No. Teil. Nr. Pièce No	Qty Menge Qté
	299213	1
	(355813)	
	258763	1
	(355783)	
*41	36613	5
42	306303	2
	(357243)	
	(357233)	
	(357223)	
	(355793)	
*43	209743	3
	(357243)	
	(357233)	
	161373	3
	(357223)	
	251503	3
	(357243)	
	(355793)	
	161373	3
	(357233)	
	(355793)	
	288273	3
	(357223)	
44	299113	6
	(357243)	
	299113	3
	(357233)	
	(355813)	
	(355793)	
	299093	3
	(357223)	
	299093	3
	(355803)	
	299093	3
	(357233)	
	299113	3
	(357223)	
*45	251663	3
	(355813)	
	(355793)	
	298893	3
	(355803)	
	(355793)	
46	306313	1

Item No. Pos Nr. No. Article	Part No. Teil. Nr. Pièce No	Qty Menge Qté
	(357243)	
	(357233)	
	(357223)	
	266483	1
	(355793)	
47	299163	1
	(357243)	
	(357233)	
	(357223)	
	(355813)	
	(355803)	
48	312453	1
	(357243)	
	312443	1
	(357233)	
	312433	1
	(357223)	
*49	251503	3
	(355813)	
	161373	3
	(355803)	
50	306543	1
	(357223)	
	306473	1
	(355803)	
51	206163	1
	(357243)	
	(357233)	
	(357223)	
	162333	1
	(355813)	
	(355803)	
	206163	2
	(355793)	
	312303	2
	(355783)	
52	357173	1
	(357243)	
	357163	1
	(357233)	
	(357223)	
	355743	1
	(355813)	
	355723	1

Item No. Pos Nr. No. Article	Part No. Teil. Nr. Pièce No	Qty Menge Qté
	(355803)	
53	293433	1
	(355793)	
54	298893	3
	(357233)	
	298893	3
	(357223)	
	251663	3
	(357223)	
	(357233)	
	251663	6
	(357243)	
55	299083	3
	(355793)	
56	355773	1
	(355793)	
*57	299183	1
	(357243)	
	(357233)	
	(357223)	
	(355803)	
	(355813)	
58	-	
59	355753	1
	(355783)	
60	266393	1
61	236273	1
62	325103	1
63	223133	4
64	236313	2
65	326653	1
66	355893	1
67	54853	2
*68	6512	2
69	228003	2
70	355883	1
71	323403	3
72	322253	1
73	223203	1
74	322493	1
75a	355823	1
75b	357183	1
75c	357283	1
75d	357203	1
75e	357193	1
76a	324143	1
76b	92342	1

AirToolPro.com by Zampini Industrial Group - Premier Tool Suppliers Since 1987 1-800-353-4676

AirToolPro.com by Zampini Industrial Group - Premier Tool Suppliers Since 1987 1-800-353-4676

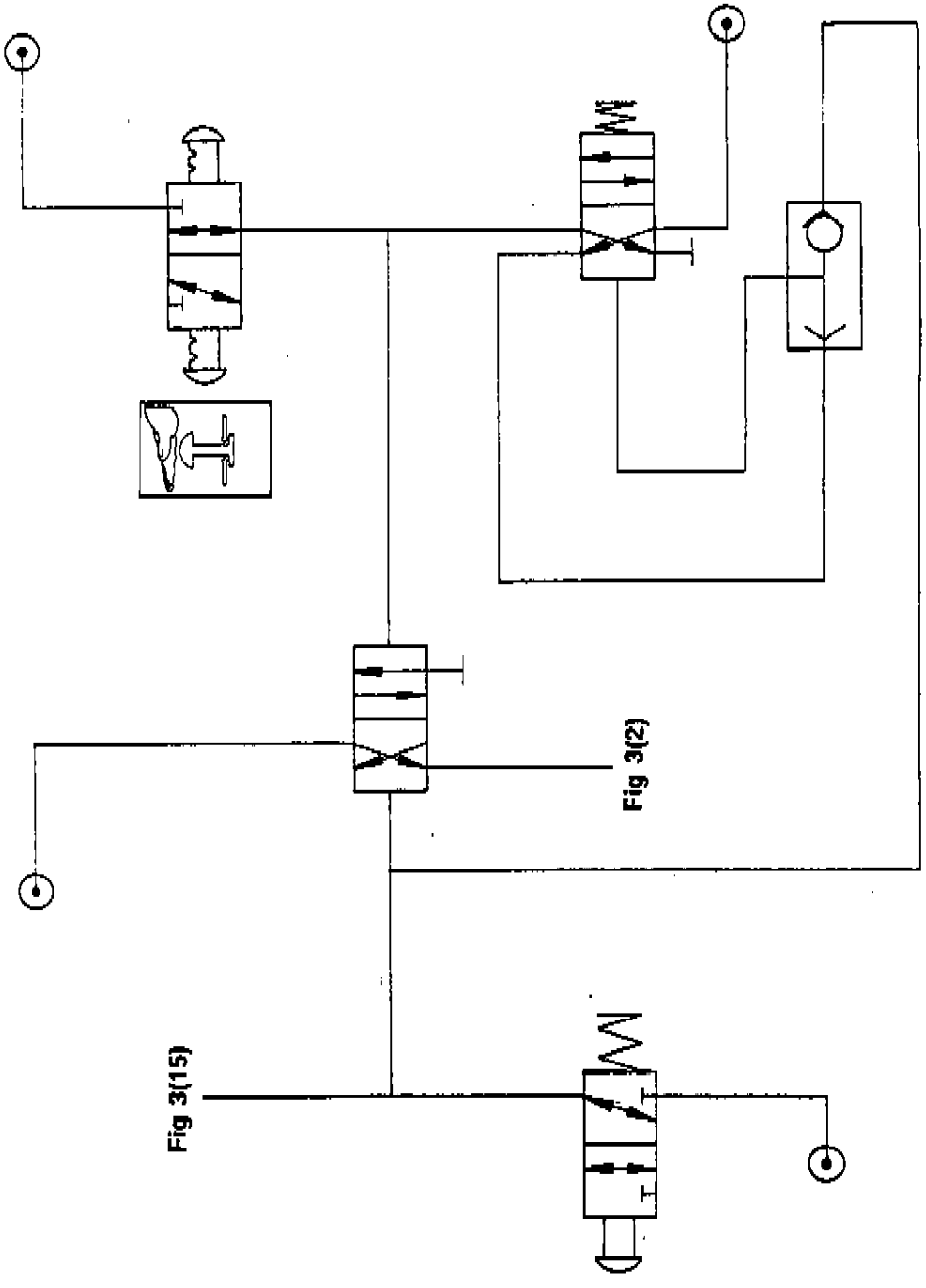

PERATORS INSTRUCTIONS

r Supply - Main

A water free and filtered air supply is required, at a pressure of 6.3 ar (91.4lbf/in2), with a flow rate of 9.9l/s (21cu.ft/min) controlled by pressure regulator selected from the Desoutter Air Line Service quipment Catalogue.

r Supply - Remote

The basic requirements are as above but the pressure must be at ast 2.7bar (40 lbf/in2) and the flow requirement when signalling is 47 l/s (1cu.ft/min). The signal duration should be kept to the inimum to reduce air consumption.

ATA

aximum air pressure Pmax = 8bar
inimum air pressure Pmin = 6bar
ound pressure level = 75dBA
AGI-PNEUROP Test Code)
eight = 4.2kg

ubrication

Correct lubrication is vital for maximum performance of the tool and miniature airline lubricator selected from the Desoutter Air Line ervice Equipment Catalogue should be fitted into the system down ream of the filter.

Desoutter recommend the use of an ISO Viscosity Classified oil, ade number ISO VG 15, in the lubricator.

latement of Use

The tool is designed for drilling holes, but may be adapted for other ecified purposes, using Desoutter approved accessories.

OTE: Provision must be made for an Emergency Stop if the tool is used alone or built into a machine. A suitable circuit diagram for manufacturing an Emergency Stop is provided in Figure 2.

'ARNING:

(1) ALWAYS DISCONNECT THE TOOL FROM THE AIR SUPPLY BEFORE ATTEMPTING ANY REPLACEMENT, ADJUSTING, SERVICING OR DISMANTLING.

(2) ENSURE THAT NO LOOSE ARTICLES OF CLOTHING OR CLEANING MATERIAL CAN BE CAUGHT BY THE ROTATING PARTS OF THE TOOL.

(3) ALWAYS ALLOW THE TOOL TO STOP BEFORE REMOVING THE WORK.

(4) ENSURE THAT THE WORK PIECE IS SECURELY CLAMPED BEFORE COMMENCEMENT OF OPERATION.

(5) ENSURE THAT THE TOOL IS SECURELY CLAMPED AROUND THE OUTER CASE BEFORE COMMENCEMENT OF OPERATION.

(6) ENSURE THAT SAFETY GUARDS ARE FITTED.

(7) BEWARE OF TOOL OUTPUT. THIS ADVANCES AND ROTATES.

(8) EYE AND EAR PROTECTION MUST BE WORN WHEN OPERATING THE TOOL.

(9) DO NOT OPERATE THE TOOL IN EXPLOSIVE ATMOSPHERES.

(10) WHEN MACHINING HAZARDOUS MATERIALS, PROVISION MUST BE MADE FOR DUST COLLECTION OR SUPPRESSION.

(11) ENSURE THAT AN EMERGENCY STOP IS PROVIDED FOR THE TOOL, WHETHER USED ALONE OR BUILT INTO A MACHINE. A SUITABLE EMERGENCY STOP CIRCUIT IS DETAILED IN FIGURE 2.

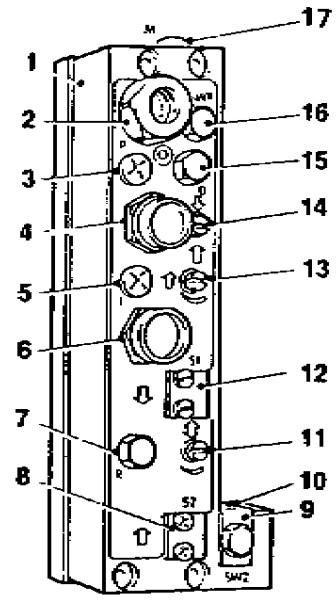

FIGURE 3 VALVE BLOCK MODULE COMPLET

CONTROL VALVE (FIGURE 3)

The valve block module complete (1) contains all th functions and signal originations for external control.

The controls and locations are identified below and deta Drilling operation.

LOCATION:

2 Main Air Inlet port, tapped ¼in BSP

3 'P' Input port, tapped M5. Signal peck feed or Dwell control kit circu

4 Manual Retract Button (Red).

5 'I' Remote Start Input port, ta Receives external signal to start th

6 Manual Start Button (Green).

7 'R' Retract Output port, tapped 1 Second external retract signal.

AirToolPro.com by Zampini Industrial Group - Premier Tool Suppliers Since 1987 1-800-353-4676

GB

†8 Position for 'S2' Solenoid Valve for Electric Emergency Retract.

†9 Position for 'SW2' Proximity Switch, detects a signal at the end of a cycle for interface kit connection (i.e. it is High at depth.

10 Stroke Control Valve.

11 Feed Rate Regulating Screw.

†12 Position for 'S1' Solenoid Valve for Electric Start.

13 Retract Rate Regulating Screw.

14 Advance rate regulating Screw.

15 'O' port, tapped 1/8in BSP receives signal to return the feed to start position for peck feed or Dwell control.

†16 Position for 'SW1' Proximity Switch, detects a signal at the beginning of a cycle for interface kit connection. (i.e. is High in datum position).

17 'M' port, is tapped M5. Used for sequence control. The signal is produced when the tool is at rest.

NOTE: The 'M' port is intended for the operation of pilot valves. It must not be used as a source of air supply for other uses.

† Available in KIT form. See Desoutter Catalogue for details.

Control Valve Block Module - Basic (Figure 4)

This control valve block module is used when the tool is to be controlled remotely. Figure 4 details the signal originations.

NOTE: External circuitry will be required to control the speed of advance and retract feeds.

LOCATION

1. Air supply inlet, tapped ¼in BSP or NPT.
2. Retract Air port, tapped 1/8in BSP.
3. Advance Air port, tapped 1/8in BSP.

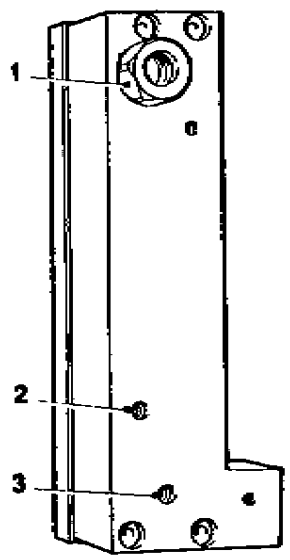

FIGURE 4 VALVE BLOCK MODULE BASIC

Accessories

Mounting Clamps - A range of clamps bases and columns are available. Full details obtained from Desoutter.

Hydraulic Check Unit (HCU) - The tool will function satisfactorily, when drilling a blind hole at the set feed rate. Should it be required to break through the material and possibly through into another hole, feed acceleration will occur with possible drill breakage. To obviate this, the fitment of an HCU is strongly recommended. Request information from Desoutter.

Peck Feed Drills - The Desoutter Peck Feed Drill System should be used when the depth of the hole to be drilled is five or more times the hole diameter. This helps clear drill chips and avoids excessive overheating of drill bit. Hole size accuracy can be improved and drill bit run-out can be kept to the minimum. Request information from Desoutter.

SETTING DRILLING OPERATION (See Figure 5)

The drill must be at least 6mm (0.25in) above the work piece.

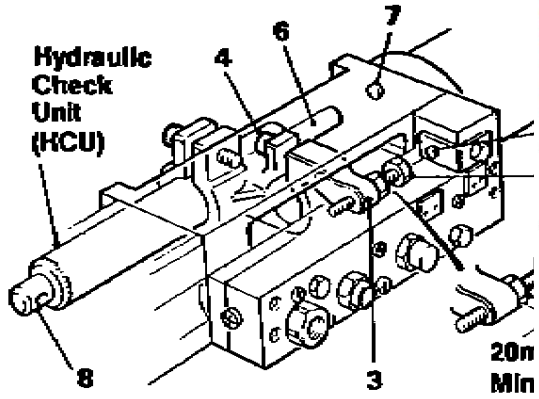

FIGURE 5 HYDRAULIC CHECK UNIT (HCU

NOTE: This setting details a unit with a HCU, reference should be ignored when setting the standard to

Set the gap between the (1) and (2) to equal the dept required PLUS the distance the bit is above the work sliding (3). Lock in position with (4) to the recommend

Position the HCU in (3). Set the gap between (6) a distance as required above the work piece.

Unscrew (8) away from the HCU to adjust the resistanc HCU to the minimum.

Fully open the Figure 3 (13).

Close Figure 3 (11/14).

Connect the air supply and press Figure 3 (6).

Adjust Figure 3 (11/13/14) to give the required adva feeds for the operation.

Use Figure 5 (5) for the final depth adjustment.

Lock using Figure 5 (9).

Carry out a set of trial drillings to determine the ideal a HCU settings using Figure 3 (11/14).

AirToolPro.com by Zampini Industrial Group - Premier Tool Suppliers Since 1987 1-800-353-4676

SETTING TAPPING OPERATION

NOTE: 1. It is important that the advance rate of the tool is set to match the pitch of the thread which is to be tapped. An incorrect advance rate will result in a deformed thread, this will be more noticeable in plastics or light alloy materials.

2. The retract rate should be set to withdraw the tap at a slightly faster rate than it advanced, this will ensure a clean withdrawal.

Mount a tool, with the selected tap securely retained in the chuck, above a test block to carry out sample tapping operations.

The end of the tap MUST be at least 14mm (9/16in) above the test block, to allow for the tapping head reversing engagement travel. Set the gap between Figure 5 (2) and (1) to equal the tapping depth PLUS the distance the tap is above the work piece.

Adjust Figure 3 (11/13/14) to give the required advance, retract feeds for the operation.

Carry out a trial tapping operation and inspect the finished thread form, adjust as necessary Figure 3 (11/13/14) and repeat until information in NOTES 1 and 2 are satisfied.

SERVICING REQUIREMENTS

General Notes

Use the following lubricants:

Grease - BP FG00 EP, for bearings.
Grease - Duckhams Type Q5618, for gears, splines and threads.
Grease - Molykote PG75 Plastislip, for 'O' rings and seals.

Cleaning

Requirements:

(1) Container to immerse components.

(2) Good quality clean paraffin.

Soak the components in the container containing the paraffin. Ensure full immersion, agitate components to ensure that air passages are flushed through. Remove components from the container, thoroughly dry and blow through air passages to remove moisture. Place components in an air tight container until required for assembly. Dispose of the dirty paraffin in accordance with health and safety regulations.

MAINTENANCE

It is recommended that the tool is serviced at 1000hrs running time.

Dismantle the tool using the exploded view. Clean all components and inspect for wear or damage, exchange if necessary. Apply new lubricant to the relevant parts in accordance with list. Assemble the tool using the exploded view.

Torque values given are ±5%.

Special tools shown in exploded view are in addition to normal workshop tools.

NOTE: Protective gloves and eye protection should be worn during cleaning of parts. Eating or smoking is prohibited when cleaning, dismantling or assembling tool.

Worn components should be carefully handled and disposed of safely.

* Indicates normal replacement items. It is recommended that adequate stocks are held for servicing requirements.

Always quote the tool number, serial number and spare part number when ordering spares.

Desoutter

Desoutter Limited.
319, Edgware Road, Colindale, London NV

Part No. 3

AirToolPro.com by Zampini Industrial Group - Premier Tool Suppliers Since 1987 1-800-353-4676