367507

1-800-353-4676
AirToolPro.com by Zampini Industrial Group - Premier Tool Suppliers Since 1987

Desoutter

tomatic Feed Drill
d Tapper - Pneumatic

	Code
·7000	1421534
·5400	1421454
·3400	1421374
·2100	1421294
·1250	1421114
· 790	1421034
· 490	1420984
·1250	1430024
· 790	1430104
· 490	1430224

ating Instructions,
cing Instructions
Parts List

VALVE BLOCK MODULE COMPLETE

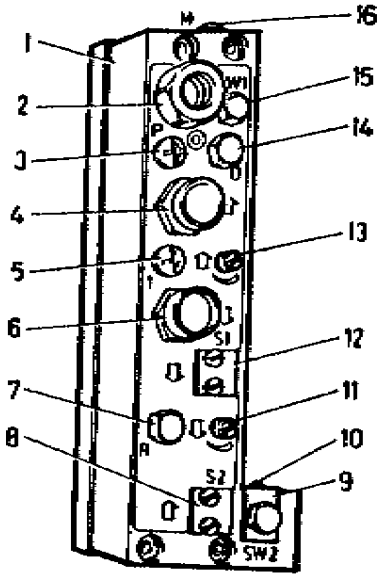

Fig (1)

OPERATING

VALVE BLOCK MODULE COMPLETE (See Fig. (1))

The valve block module complete (1) contains all the control functions and signal originations for external control

The controls and locations are identified below and detailed in the Drilling operation

LOCATION 2 Main Air Inlet port, tapped 1/4 in BSP or NPT.

3 'P' Input port, tapped M5 Signal point for peck feed or Dwell control kit circuit.

4 Manual Retract Button (Red).

5 'I' Remote Start Input port, tapped M5 Receives external signal to start the tool cycle

6. Manual Start Button (Green).

7 'R' Retract Output port, tapped ⅛in. BSP Sends external retract signal.

$8. Position for 'S2' Solenoid Valve for Electric Emergency Retract.

$9. Position for 'SW2' Proximity Switch, detects a signal at the end of a cycle for interface kit connection. (i.e. it is High at depth).

10. Stroke Control Valve.

11. Advance Rate Regulating Screw

$12. Position for 'S1' Solenoid Valve for Electric Start

13. Retract Rate Regulating Screw.

14. 'O' port, tapped 1/8 in. BSP, receives signal to retur the feed to start position for peck feed or Dwell con

$15. Position for 'SW1' Proximity Switch, detects a signal the beginning of a cycle for interface kit connection, (i.e. is High in datum position).

16. 'M' port, is tapped M5. Used for sequence control TI signal is produced when the tool is at rest

NOTE: The 'M' port is intended for the operation of pilot valves. It must not be used as a source of air supply fo other uses.

$ Available in KIT form. See Desoutter Catalogue for details.

WARNING:

(1) ALWAYS DISCONNECT THE TOOL FROM THE AIR SUPPLY BEFORE ATTEMPTING ANY REPLACEMENT, ADJUSTING, SERVICING OR DISMANTLING

(2) ENSURE THAT NO LOOSE ARTICLES OF CLOTHING OR CLEANING MATERIAL CAN BE CAUGHT BY THE ROTATING PARTS OF THE TOOL

(3) ALWAYS ALLOW THE TOOL TO STOP BEFORE REMOVING THE WORK.

(4) ENSURE THAT THE WORK PIECE IS SECURELY CLAMPED BEFORE COMMENCEMENT OF OPERATION.

(5) CLEAR ALL LOOSE ITEMS FROM VICINITY.

Post-it® Fax Note 7671 Date # of pages ▶
To From
Co. Phone #
Fax #

Main Assembly

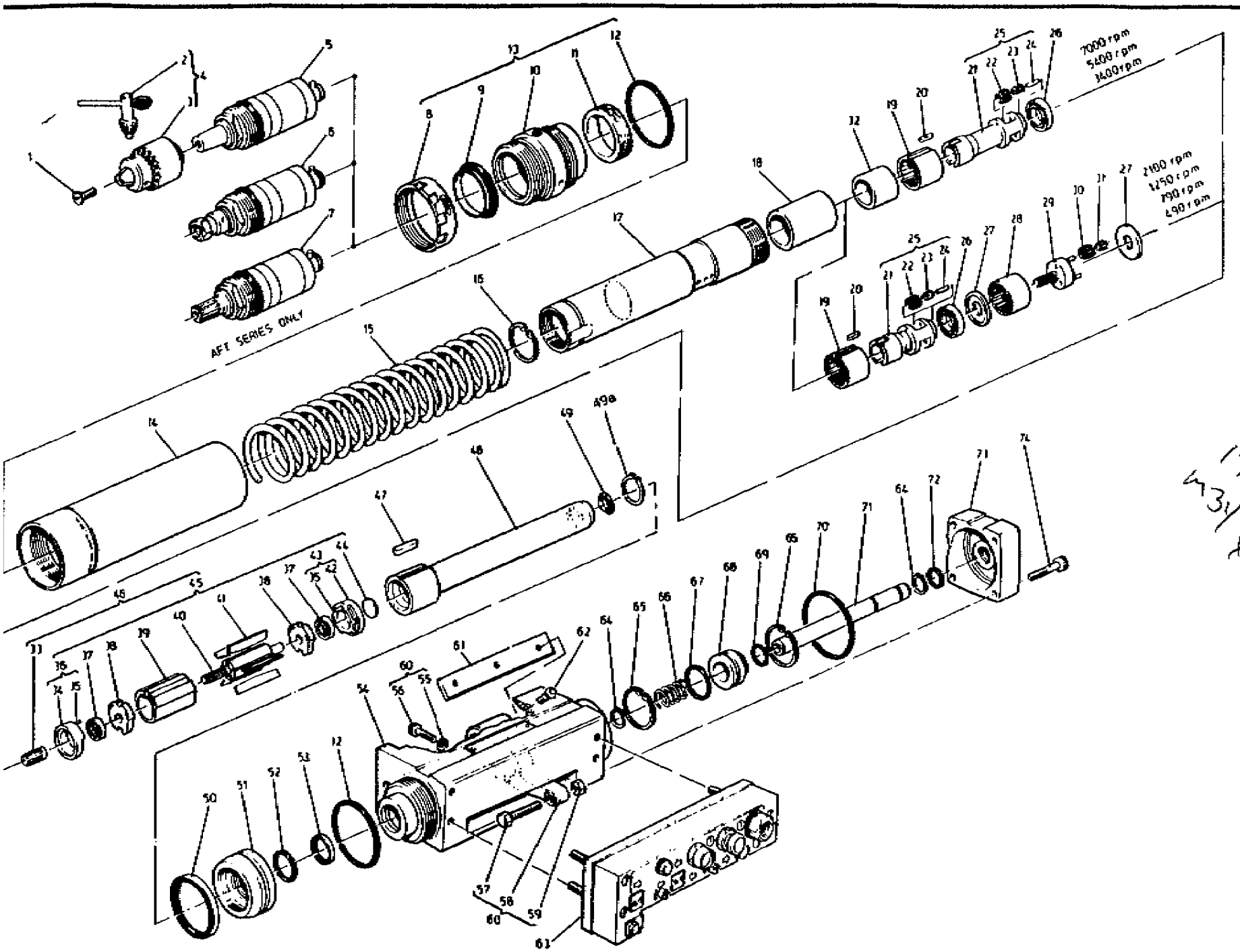

AirToolPro.com by Zampini Industrial Group - Premier Tool Suppliers Since 1987 1-800-353-4676

Parts List - Main Assembly

Part No.	Description	Qty.
327713	Chuck Screw	1
Available	Chuck	1
29232	Chuck Key	1
34752	Chuck & Key	1
327723	Chuck Spindle Complete (for AFD-Series)	1
326573	Collet Spindle Complete (option - for AFD-Series)	1
326583	Splined Output Shaft Complete (for AFT-Series)	1
286153	Thread Protection Sleeve	1
322433	Seal	1
Available	Bearing Sleeve	1
322113	Felt Ring	1
50783	'O' Ring	2
328013	Bearing Sleeve Complete	1
322403	Outer Case	1
98113	Spring	1
113173	Circlip	1
322693	Quill	1
322803	Distance Spacer	1
299163	Gear Ring	1
308943	Key	1
322793	Planet Cage - 7000 rpm	1
322783	Planet Cage - 5400 rpm	1
322773	Planet Cage - 3400 rpm	1
322763	Planet Cage - 2100 rpm	1
322753	Planet Cage - 1250 & 790 rpm	1
322743	Planet Cage - 490 rpm	1
299073	Planet Wheel - 2100 & 7000 rpm	3
299093	Planet Wheel - 1250, 790 & 5400 rpm	3
299113	Planet Wheel - 490 & 3400 rpm	3
298893	Caged Needle Roller Assembly - 2100, 1250, 790, 7000 & 5400 rpm	3
251663	Caged Needle Roller Assembly - 490 & 3400 rpm	3
161373	Planet Pin - 2100, 1250, 790, 7000 & 5400 rpm	3
251503	Planet Pin - 490 & 3400 rpm	3
328553	Planet Cage Complete - 7000 rpm	1
328543	Planet Cage Complete - 5400 rpm	1
328533	Planet Cage Complete - 3400 rpm	1
328523	Planet Cage Complete - 2100 rpm	1
328513	Planet Cage Complete - 1250 & 790rpm	1
328503	Planet Cage Complete - 490 rpm	1
299183	Bearing	1
306303	Washer	2
306313	Gear Ring	1
306683	Carrier Complete - 2100 rpm	1

Item No.	Part No.	Description	Qty.
	306693	Carrier Complete - 1250 rpm	1
	306703	Carrier Complete - 790 rpm	1
	306713	Carrier Complete - 490 rpm	1
30	299073	Planet Wheel - 2100 rpm	3
	299093	Planet Wheel - 1250 rpm	3
	299113	Planet Wheel - 790 & 490 rpm	3
*31	298893	Caged Needle Roller Assembly - 2100 & 1250 rpm	3
	251663	Caged Needle Roller Assembly - 790 & 490 rpm	3
32	322813	Distance Spacer - 7000, 5400 & 3400 rpm	1
33	299153	Pinion - 7000 rpm	1
	306473	Pinion - 5400 rpm	1
	306553	Pinion - 2100 rpm	1
	306543	Pinion - 1250 rpm	1
34	254893	Front Bearing Housing	1
*35	256123	Spring Pin	2
36	304683	Front Bearing Housing Complete	1
*37	33403	Bearing	2
38	254873	Bearing Plate	2
39	254853	Cylinder	1
40	306513	Rotor - 7000 & 5400 rpm	1
	299213	Rotor - 3400 rpm	1
	306503	Rotor - 2100 & 1250 rpm	1
	266553	Rotor - 790 & 490 rpm	1
*41	36613	Rotor Blade	5
42	Not Available	Rear Bearing Housing	1
43	254913	Rear Bearing Housing Complete	1
44	254903	End Cap	1
45	313303	Motor Complete - 3400 rpm	1
	266663	Motor Complete - 790 & 490 rpm	1
46	313283	Motor Complete - 7000 rpm	1
	313293	Motro Complete - 5400 rpm	1
	312203	Motor Complete - 2100 rpm	1
	312213	Motor Complete - 1250 rpm	1
47	327103	Key	1
48	322703	Extension Tube	1
*49	323393	Seal	1
*49a	322603	Circlip	1
*50	322443	Seal	1
51	322153	Piston	1
*52	67823	'O' Ring	1
*53	322453	Seal	1
54	328023	Control Housing Complete	1
*55	6512	Spring Washer	2
56	228003	Screw (M6)	2
57	322493	Fine Adjusting Screw (M6)	1
58	Not Available	Crosshead	1
59	223203	Nut	1

Item No.	Part No.	Description	Qty.
60	327843	Crosshead Complete	1
61	322253	Guide Key	1
62	323403	Screw (M4)	3
63	324143	Valve Block Module Complete - 1/4 in BSP	1
	324133	valve BlockModule Complete - 1/4 in NPT	1
*64	323413	Circlip	2
*65	323383	Circlip	2
66	327093	Spring	1
*67	323473	'O' Ring	1
68	322733	Air Inlet Plate	1
*69	323483	'O' Ring	1
*70	322513	'O' Ring	1
71	322713	Air Feed Tube	1
*72	323493	'O' Ring	1
73	322723	End Cap	1
74	223133	Screw (M6)	4

* Indicates normal replacement items. It is recommended that adequate stocks are held for servicing requirements.

\# Indicates updated parts.

Always quote the tool number, serial number and spare part number when ordering spares.

AirToolPro.com by Zampini Industrial Group - Premier Tool Suppliers Since 1987 1-800-353-4676

AirToolPro.com by Zampini Industrial Group - Premier Tool Suppliers Since 1987 1-800-353-4676

EMENTS

ly · Main

ee and filtered air supply is required, at a pressure of 6 in²), with a flow rate of 9.9l/s (21 cu.ft/min) controlled by regulator selected from the Desoutter Air Line Service Catalogue

r · Remote

requirements are as above but the pressure must be at r (40lbf/in²) and the flow requirement when signalling is cu ft/min) The signal duration should be kept to the reduce air consumption.

T

rication is vital for maximum performance of the tool lure airline lubricator selected from the Desoutter Air Equipment Catalogue should be fitted into the system of the filter

ecommend the use of an ISO Viscosity Classified oil, er ISO VG 15 in the lubricator

be operated on dry line.

amps · A range of clamps, bases and columns are details obtained from Desoutter

eck Unit (HCU) The tool will function satisfactorily, blind hole at the set feed rate Should it be required igh the material and possibly through into another eleration will occur with possible drill breakage To he fitment of an HCU is strongly recommended. nation from Desoutter

ills · The Desoutter Peck Feed Drill System should the depth of the hole to be drilled is five or more diameter This helps clear drill chips and avoids heating of drill bit Hole size accuracy can be drill bit run-out can be kept to the minimum Request m Desoutter

Drilling · A series of 2, 3, 4 and 5 spindle drilling able Full details available from Desoutter

Tool

be clamped only in the area indicated on the

e at least 6mm (0 25in) above the work piece.

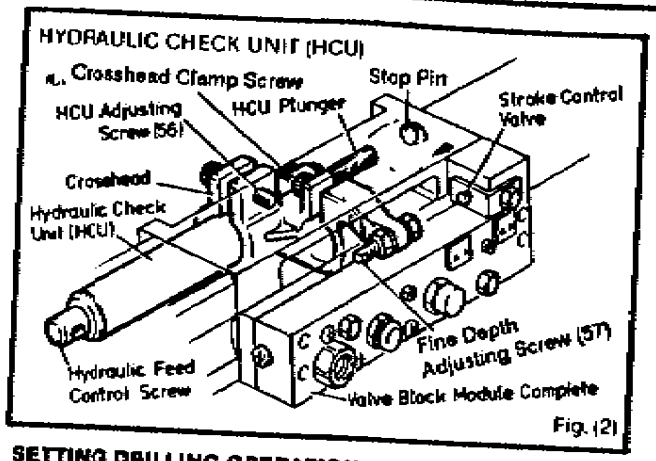

Fig. (2)

SETTING DRILLING OPERATION (See Fig. (1) & Fig. (2))

NOTE: This setting details a unit with a HCU, reference to the HCU should be ignored when setting the standard tool.

Set the gap between the stroke control valve and the fine adjusting screw (57) to equal the depth of drilling required PLUS the distance the bit is above the work piece, by sliding the crosshead. Lock in position with crosshead clamp screw.

Position the HCU in the crosshead Set the gap between the HCU plunger and the stop pin to a distance as required above the work piece

Unscrew the hydraulic feed control screw away from the HCU to adjust the resistance within the HCU to the minimum

Fully open the retract rate regulating screw (13).

Close the advance rate regulating (11)

Connect the air supply and press the manual start button (6)

Use the fine adjusting screw for the final depth adjustment.

Carry out a set of trial drillings to determine the ideal advance and HCU settings using the advance rating regulating screw (11).

SETTING TAPPING OPERATION

NOTE: 1. It is important that the advance rate of the tool is set to match the pitch of the thread which is to be tapped An incorrect advance rate will result in a deformed thread, this will be more noticable in plastics or light alloy materials.

2 The retract rate should be set to withdraw the tap at a slightly faster rate than it advanced, this will ensure a clean withdrawal

Mount the tool, with the selected tap securely retained in the chuck, above a test block to carry out sample tapping operations

The end of the tap MUST be at least 14mm (9/16in) above the test block, to allow for the tapping head reversing engagement travel Set the gap between the fine adjusting screw and the stroke control valve to equal the tapping depth PLUS the distance the tap is above the work piece.

Set the advance rate adjustment screw 1 turn open and the retract rate adjustment screw 1½ turns open

Carry out a trial tapping operation and inspect the finished thread form, adjust as necessary the advance/retract screws and repeat until information in NOTES 1 and 2 are satisfied

SERVICING REQUIREMENTS

General Notes

Use the following lubricants:

Grease - BP FG00 EP, for bearings.
Grease - Duckhams Type Q5618, for gears, splines and threads
Grease - Molykote PG75 Plastislip, for 'O' rings & seals.

The following torque values MUST be used

Item No.	Description	Torque (Nm)	Thread
5 to 17	Chuck Spindle Complete to Quill	27 - 30	RH
6 to 17	Collet Spindle Complete to Quill	27 - 30	RH
7 to 17	Splined Output Shaft Complete to Quill	27 - 30	RH
10 to 14	Bearing Sleeve to Outer Case	14 - 16	RH
14 to 54	Outer Case to Control Housing Complete	40 - 47	LH
51 to 17	Piston to Quill	27 - 30	RH

AirToolPro.com by Zampini Industrial Group - Premier Tool Suppliers Since 1987 1-800-353-4676

ools

n to the normal range of workshop tools the following uired

Description	Qty
Wedges (pair), for Item 1 (No 2 Taper)	1
'C' - Spanner for Items 10 & 127	1
Wedges (pair), for Item 104 (No 1 Taper)	1
Hexagon Key (5mm), for Items 56 & 76	1
Hexagon Key (3mm), for Item 62	1
10mm - Spanner, for Items 57 & 59	1
Spanner (open-ended), for Item 100 - supplied	1
Spanner (open-ended), for Item 102 - supplied	1
Hexagon Key (7/16in A/F), for Item 103 (No 1 Taper) - supplied	1
Hexagon Key (5/32in. A/F) for Item 103 (No. 2 Taper) - supplied	1
46mm - Spanner, for Item 120	1
Service Tool, for Items 119 & 122	1
Spanner, for Items 119 & 122	1
Clamp Blocks (pair), for Item 14	1

necessary all 'O' rings, circlips bearings, spring pins, als and felt silencer

at have a retainer holding the balls in place must be nto the tool with the blank face of the retainer to the

ht Hand (RH) thread:- Fasten turning the item clockwise

Hand (LH) thread.- Fasten turning the item anti-clockwise

Tank to immerse components
Good quality clean paraffin

mponents in the tank ensuring full immersion, agitate ents to ensure that any air passages are flushed soaking, remove from the tank and thoroughly dry any air passages to remove all moisture. Keep all ponents in an airtight container until required

FLE

guard fitted to the tool and the chuck (3) or the lapping ete (128) Mount the tool between a pair of clamp f the outer case (14), horizontally and clamp firmly in

remove the four screws (74)

fitted, remove by unscrewing the screw (56) See

THE BEARING SLEEVE COMPLETE (13) IS UNDER SPRING (15) COMPRESSION.

While resisting the thrust due to the spring (15), carefully unscrew and remove the bearing sleeve complete (13) followed by the spring (15).
Complete the rest of the dismantling of the tool following normal engineering practices using the illustration as a guide and the recommended tools

TO ASSEMBLE

It is recommended that all 'O' rings are renewed and greased on assembly

Using the illustration as a guide, build up the sub-assemblies of the bearing sleeve complete (13), and the planet cage complete (25)

The Motor Complete (45) or (46): Take the rotor (40) and place the rear bearing plate (38) with grooves to the rotor into position Press the rear bearing (37) onto the rotor so that there is a 0 038mm (0 0015in) gap between the rotor and the rear bearing plate Holding the rotor and the rear bearing plate assembly with the gear end of the motor uppermost, slide the cylinder (39) over the rotor

Locate the rotor blades (41) into their slots in the rotor (40) and lubricate Place this sub-assembly gear end of the rotor spigot uppermost, onto a fixture which locates only on the rotor rear spigot Align the location slot in the bearing plate (38) with the pin holes in the cylinder and push on the front bearing (37) Press home until the bearing bottoms on the front bearing plate (38) BUT do not preload the bearing Locate the rear bearing housing (42) with its spring pin (35) onto the motor then, press on the front bearing housing complete (36), making sure that the spring pins are correctly located Check for free rotation of the motor

Complete the rest of the assembly of the tool following normal engineering practices, using the illustration as a guide and the recommended tools.

TESTING AFTER ASSEMBLY

Required:

Hand Tachometer with a scale range to suit tool

Dial Test Indicator (DTI) on stand

Mandrel - 51mm (2in) diameter

Spring Balance - capable of reading over 706N (158 85lbl)

Operation Test

Fit clamp blocks to the tool and clamp in a vice with the tool horizontally and control buttons uppermost. If used, fit HCU to provide thrust resistance Set a gap of 40mm (1 5in) between the stroke control valve and the stroke adjusting screw Insert a few drops of oil into the air inlet and connect up the airline

The minimum thrust for the tool is 706N (158 85lbl)

Use the spring balance to confirm

Fully open the advance and retract regulating screws and repeatedly press the green manual start button (6) and cycle the tool a few times, checking that air pressure remains static

Screw in the advance rate regulating screw (11) to nearly closed Press the manual start button (6) and at approximately mid stroke close the advance rate regulating screw allow the motor to attain maximum free speed, then using the tachometer check that the speed is within 5% of that stated on the tool label On completion open advance rate regulating screw and allow tool to complete cycle

Insert the mandrel into the chuck and using the DTI bearing on the mandrel (12 7mm (0 5in) from chuck, check that 'run-out' does not exceed 0 15mm (0 0004in) If it is out of tolerance, tap side of chuck at high side to resettle it then re-check

Reduce air pressure to 2 06 bar (30lb/in²). Press the manual start button and adjust advance rate regulating screw so that tool advances slowly and returns Repeat test several times observing that feed and retract action is smooth and free from jerks Test piston control valve by alternatively pressing start button allowing tool to advance slightly then pressing stop button to retract Movement should be smooth and without hesitation in each direction. when satisfied, stop tool in mid stroke by closing the advance rate regulating screw Check for leaks by applying a film of oil around the valves and control buttons at their joints with the control top When satisfied press the stop button and open the advance rate regulating screw

Disconnect the airline and remove tool from vice and clamps. It is now ready for use

1-800-353-4676 AirToolPro.com by Zampini Industrial Group - Premier Tool Suppliers Since 1987

LE SPINDLE TAPPING HEAD

No.	Part No.	Description	Qty
	31642	Nut	1
	29472	Collet - 5/16in Capacity	1
	29482	Collet - 1/4in Capacity	1
	31622	Body - 5/16in Capacity	1
	31632	Body - 1/4in Capacity	1
	31672	Jaws	1
	29452	Tapping Chuck Complete - 5/16in Capacity	1
	29462	Tapping Chuck complete - 1/4in Capacity	1
	79783	Screw	1
	57003	Screw	3
	62193	Spring Housing	1
	62293	Spring	1
	62143	Thrust Race Housing	1
	68818	Outer Race	1
	68828	Case and Balls	1
	61553	End Cap	1
	10753	Planet pin	2
	502093	Caged needle Roller Assembly	2
	1443	Planet Wheel	2
	65123	End Cap Complete	1
	10713	Sun Pinion	1
	77753	Chuck Spindle	1
	10703	Internal Gear	1
	263403	Circlip	1
	1483	Bearing	1
	326783	Driving Dog	1
	324613	Case	1
	324093	Key	1
	324103	Screw	1
	290583	Circlip	1
	324113	Locknut	1
	326983	Tapping Head Complete	1

...sies normal replacement items It is recommended that ...le stocks are held for servicing requirements

...ates updated parts

...quote tool number, serial number and spare part number ...dering spares

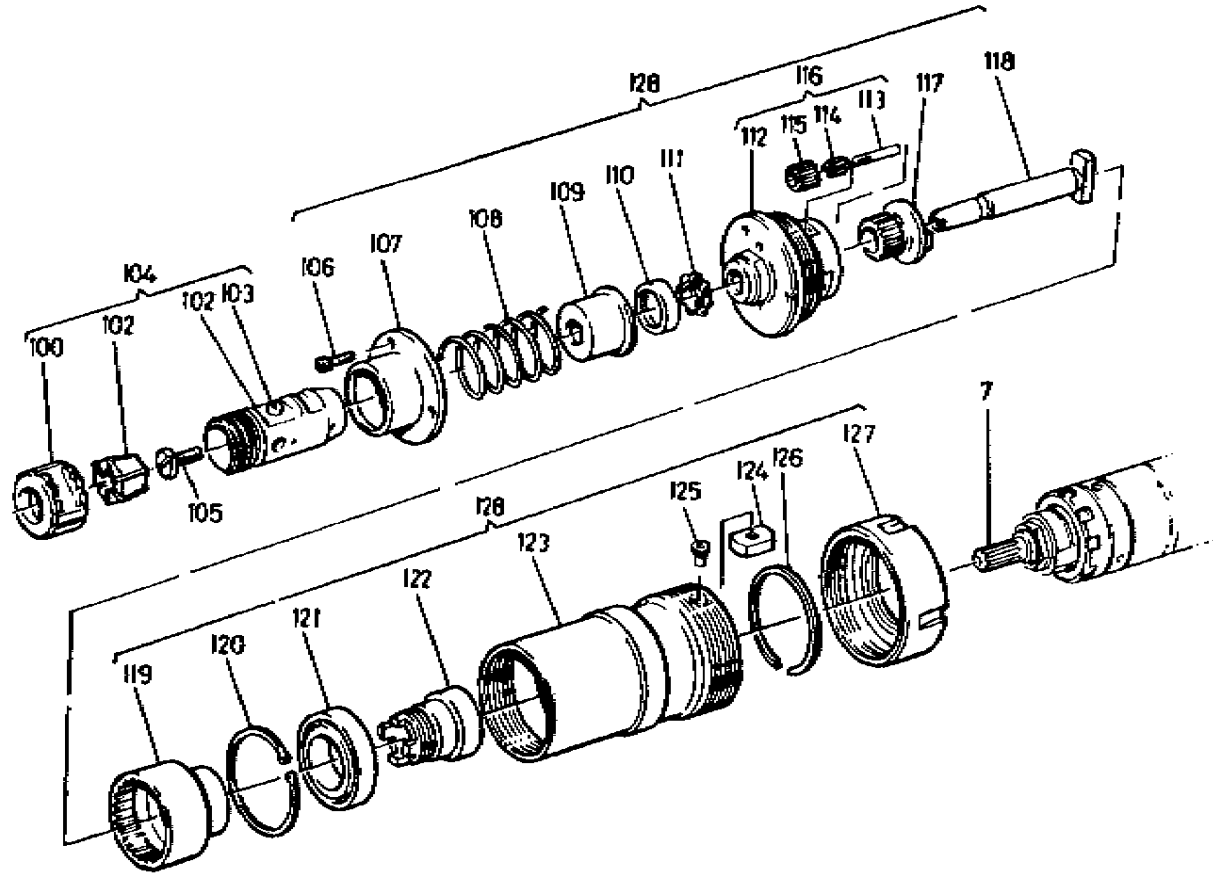

TO DISMANTLE

Remove screw (105) and using the wedges detach the tapping chuck assembly (104)

Using a C-spanner, slacken the locknut (127), slide the remainder of the tapping head complete (128) from the quill (14) then, remove the circlip (126) and locknut (127). Unscrew the three screws (106) enabling the spring housing (107), spring (108), thrust race housing (109), outer race (110) and case and ball (111) to be removed.

Unscrew the end cap complete (116) and remove with the chuck spindle (118) and the sun pinion (117)

Engage service tool 14963 with internal gear (119) and use spanner 56383 to unscrew whilst restraining the drive dog (122)

Dismantle the rest of the tool following normal engineering practices, using the illustration as a guide and the recommended tools.

TO ASSEMBLE

Reverse the dismantling instructions, following normal engineering practices using the illustration as a guide, the recommended torque figures and tools

Desoutter

Desoutter Limited,
319 Edgware Road, Colindale, London NW9 6NO
Telephone: 081 205 7050 *Telex: 21392*
Fax 081 205 5167

Printed in England 492