AirToolPro.com by Zampini Industrial Group - Premier Tool Suppliers Since 1987 1-800-353-4676

Desoutter

Auto Feed Drills and Tappers

Types	Code
AFDE60-6000	1262124
AFDE60-5300	1262204
AFDE60-4600	1262384
AFDE60-3900	1262464
AFDE60-3000	1262544
AFDE60-2300	1262624
AFDE60-1550	1262704
AFDE60-1250	1262884
AFDE60-1050	1262964
AFDE60- 830	1263014
AFDE60- 700	1263194
AFDE60- 540	1263274
AFDE60- 420	1263354
AFDE60- 290	1263434
AFTE60- 700	1263514
AFTE60- 540	1263694
AFTE60- 420	1263774
AFTE60- 290	1263854

Desoutter

Desoutter Limited.
319, Edgware Road, Colindale. London NW9 6ND.
Telephone: 081-205 7050 *Telex: 21392*
Fax: 081-205 5167

Printed in England. 6.92

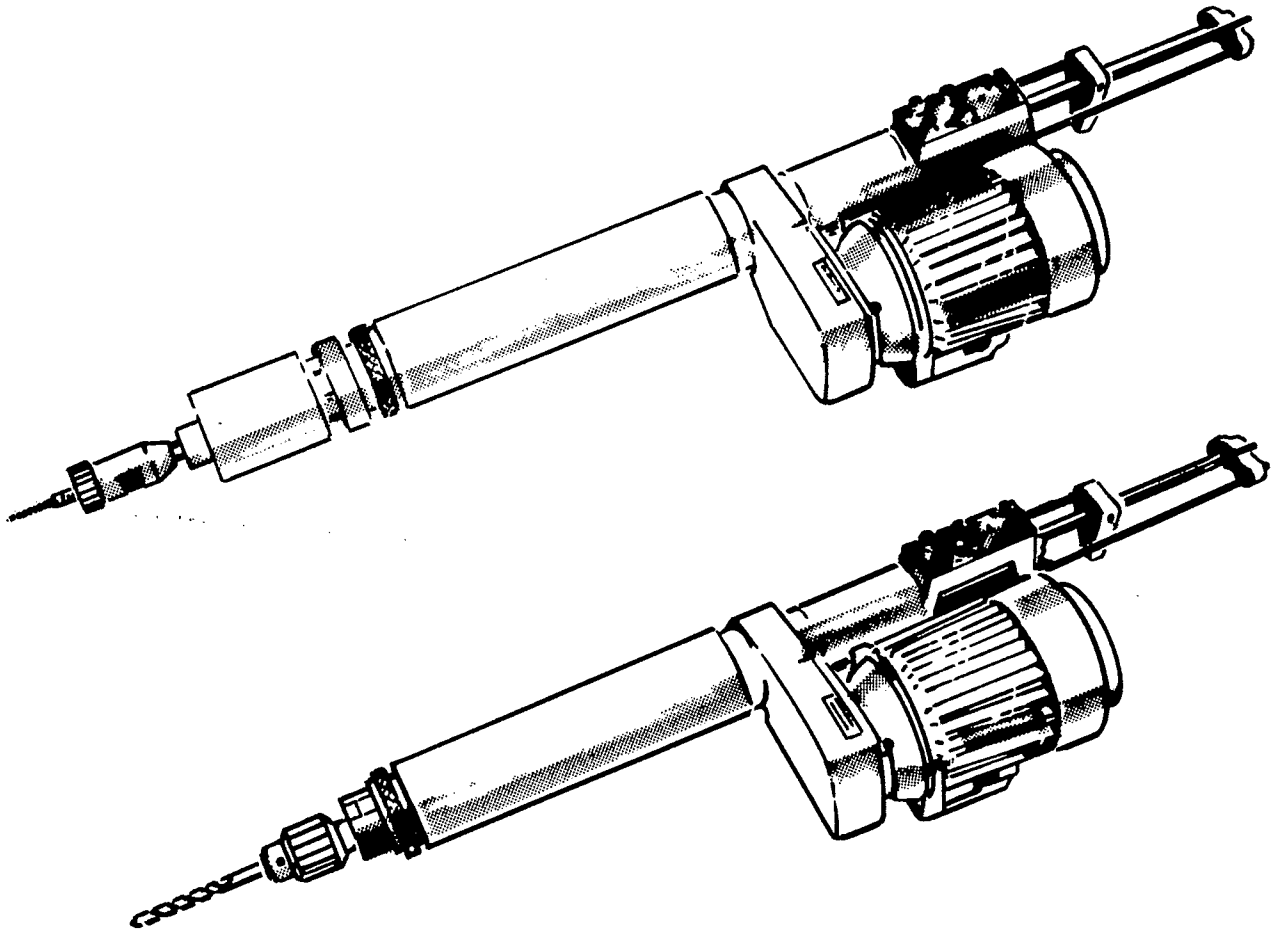

Operating Instructions
Servicing Instructions
Parts List

AirToolPro.com by Zampini Industrial Group - Premier Tool Suppliers Since 1987 1-800-353-4676

Parts List – Main Assembly

AFDE60
AFTE60

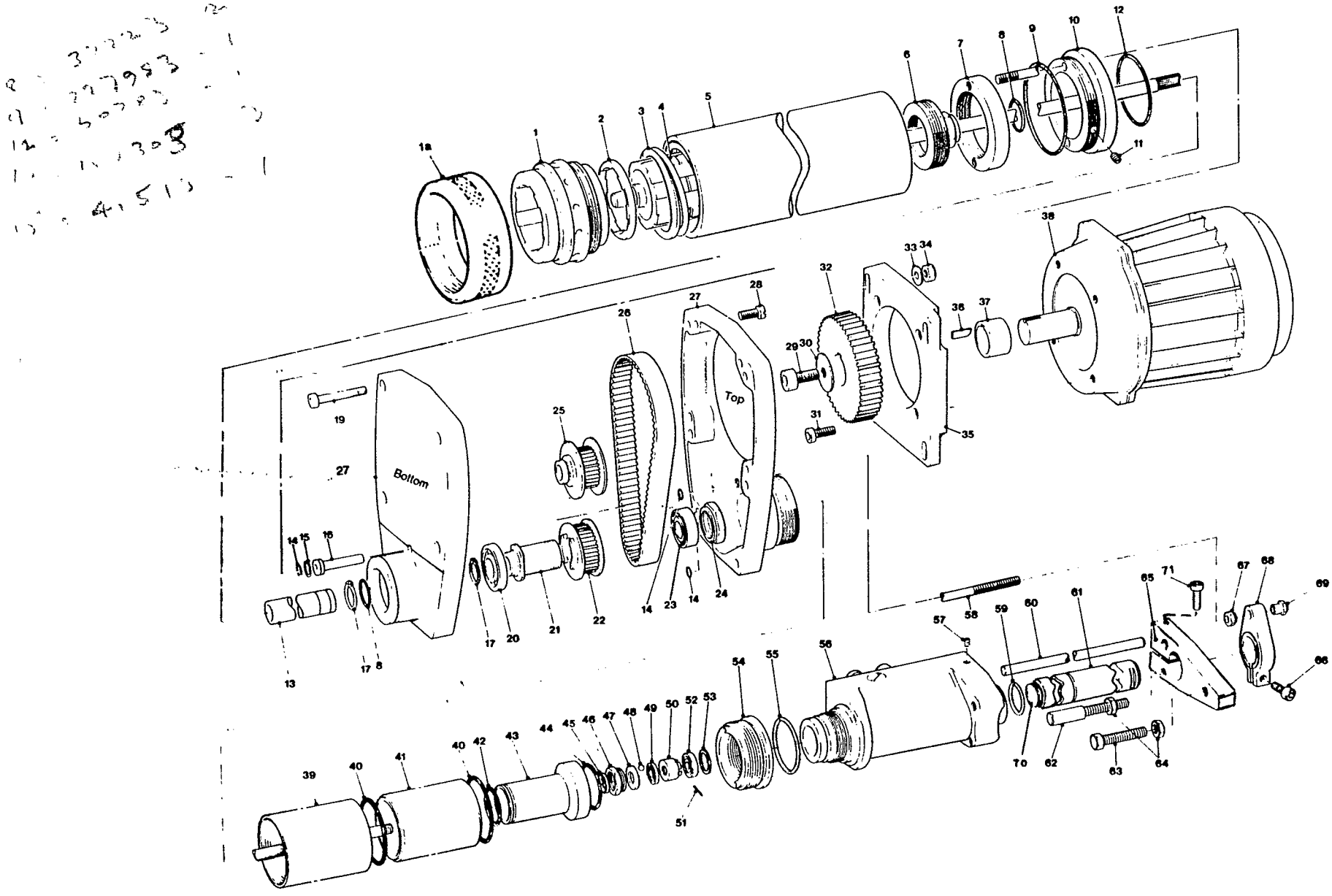

AirToolPro.com by Zampini Industrial Group - Premier Tool Suppliers Since 1987 1-800-353-4676

Servicing Instructions/Parts List – Main Assembly

AFDE60
AFTE60

TESTING AFTER ASSEMBLY

Required:

Hand Tachometer with scale range to suit tool
Dial Test Indicator (D.T.I.) on stand
Mandril – 51mm (2in.) long by 6.5mm (0.25) dia.
Spring Balance – capable of reading over 150kg (330 lbf)

Operation Test

Fit clamp blocks to the tool and clamp in a vice with the tool horizontally and control buttons uppermost. If used fit H.C.U. to provide thrust resistance. Set a gap of 40 mm (1.5 in.) between the stroke control valve and the stroke adjusting screw. Insert a few drops of oil into the air inlet and connect up the airline.

Fully open the advance and retract regulating screws and repeatedly press the green manual start button and cycle the tool a few times, checking that air pressure remains static.

Screw in the advance rate regulating screw to nearly closed. Press start button and at approximately mid stroke close the advance rate regulating screw. Allow motor to attain maximum free speed, then using the tachometer check that the speed is within 5% of that stated on the tool label-On completion, open advance rate regulating screw and allow tool to complete cycle.

The minimum thrust for this tool is 141kg (310 lbf.), use the spring balance to confirm.

Insert themandrilinto the chuck and using the D.T.I., bearing on the mandril (12.7 mm (0.5 in.) from check, check that 'run out' does not exceed 0.15 mm (0.004 in.). If it is out of tolerance, tap side of chuck at high side to resettle it then recheck.

Reduce air pressure to 2.06 bar (30 lbs/in^2). Press start button and adjust advance rate regulating screw so that tool advances slowly and returns. Repeat test several times observing that feed and retract action is smooth and free from jerks. Test piston control valve by alternatively pressing start button allowing tool to advance slightly then pressing stop button to retract. Movement should be smooth and without hesitation in each direction; when satisfied, stop tool in mid stroke by closing the advance rate regulating screw. Check for leaks by applying a film of oil around the valves and control buttons at their joints with the control top. When satisfied press the stop button and open the advance rate regulating screw.

Disconnect the airline and remove tool from vice and clamps. It is now ready for use.

Electric Motor

Electric motor testing and checking as necessary should be carried out by a competent electrician in accordance with the relevant section of the Health and Safety Act.

PARTS LIST – MAIN ASSEMBLY

Item No.	Part No.	Description	Qty.
1	172463	Bearing Sleeve	1
1*	173483	Thread Protecting Cap	1
2	158123	Silencing Ring	1
3	158063	Return Spring	1
4	See later section	Gearbox Complete	1
5	150273	Cylinder (Outer Case)	1
6	256553	Clamp Nut	1
7	256543	Collar	1
8	157303	'O' Ring	2
9	41513	'O' Ring	1
10	227213	Casting Adaptor	1
11	228013	Grub Screw	4
12	50783	'O' Ring	1
13	222663	Spindle Tube	1
14	37223	'O' Ring	3
15	227983	'O' Ring	1
16	227183	Guide Tube	1
17	47553	Circlip	2
18			
19	236443	Screw, Motor Retaining	4
20	25863	Front Bearing	1
21	223043	Pulley Spindle	1
22	302313	Pulley Complete, 26T for 5300, 4600, 3000, 2300, 1050, 830, 540, 420, 290 rpm	1
23	222673	Rear Bearing	1
24	222773	Nut, for 26T Pulley	1
25	302303	Pulley Complete, 20T for 6000, 3900, 1550, 1250, 700 rpm	1
26	302023	Belt, 80T - 4600, 1500, 1250, 1050, 830 rpm	1
	302013	Belt, 73T - 3000, 540 rpm	1
	302003	Belt, 68T - 2300, 3900, 700, 420, 290 rpm	1
	301973	Belt, 82T - 5300 rpm	1
	301983	Belt, 78T - 6000 rpm	1
27	227173	Pulley Housing (pair)	1
28	223133	Screw	6
29	223113	Pulley Retaining Screw	1
30	302363	Washer	1
31	229353	Screw, Motor Retaining	4
32	301833	Pulley, 46T - 1550, 1250, 5300 rpm	1
	301883	Pulley, 40T - 6000, 4600, 1050, 830 rpm	1
	301893	Pulley, 20T - 2300, 420, 290 rpm	1
	301853	Pulley, 26T- 3900, 3000, 700, 540rpm	1
33	223183	Washer	4
34	223203	Nut	4
35	223163	Motor Mounting Plate	1
36	227973	Key	
37	222803	Spacer	1
38	239003	Electric Motor	1
39	222873	Outer Locking Case	1
40	55833	'O' Ring	2
41	224203	Spacer	1
42	44673	'O' Ring	1
43	261953	Inner Spacer	1
44	39913	'O' Ring	1
45	224173	Oil Seal	1
46	238973	Retainer	1
47	224683	Thrust Washer	1
48	33393	Ball	5
49	222843	Thrust Washer	1
50	222853	Nut	1
51	84373	Spring Pin	1
52	33433	Bearing	1
53	225540023	Shim 0.05mm (0.002)	As req'd
	225540063	Shim 0.15mm (0.006)	As req'd
	225540103	Shim 0.25mm (0.010)	As req'd
	225540153	Shim 0.38mm (0.015)	As req'd
54	255783	Adaptor	1
55	225553	'O' Ring	1
56	See later section	Control Top Complete	1
57	265153	Set Screw	1
58	282933	Tie Rod	1
59	37223	'O' Ring	1
60	157843	Crosshead Guide Rod	1
61	261203	Air Feed Tube	1
62	60923	Stroke Adjusting Screw	1
63	51933	Adjusting Screw	1
64	52473	Locknut	2
65	298863	Crosshead	1
66	56063	Screw	2
67	227253	Tie Rod Locknut	1
68	227223	Crosshead	1
69	227243	Tie Rod Nut	1
70	37243	Pressure Plug	1
71	78283	Screw	1

*Indicates normal replacement items. It is recommended that adequate stocks are held for servicing requirements.

Always quote tool number, serial number and spare part number when ordering spares.

AirToolPro.com by Zampini Industrial Group - Premier Tool Suppliers Since 1987 1-800-353-4676

PARTS LIST – MOTOR & GEARBOX

Item No.	Part No.	Description	Qty.
201	156833	Clamp Nut	1
*202	158083	Felt Washer	1
203	156843	Spindle Nut	1
204	158073	Steel Washer	1
*205	168913	Bearing	2
206	158093	Distance Spacer	1
207	158033	Internal Gear	1
208	25568	Key	1
209	158163	Planet Cage Assembly 420, 540, 700, 830, 1250 rpm.	1
	158173	Planet Cage Assembly 1050, 1550 rpm.	1
	158193	Plant Cage Assembly 290 rpm.	1
210	157903	Planet Cage 420, 540, 700, 830, 1250 rpm.	1
	157913	Planet Cage 1050, 1550 rpm.	1
	157933	Planet Cage 290 rpm.	1
*211	89993	Bearing	4
212	89373	Planet Wheel 290 rpm.	2
	89443	Planet Wheel 1050, 1550 rpm.	2
	89523	Planet Wheel 420, 540, 700, 830, 1250 rpm.	2
*213	89383	Planet Pin	2
214	154293	Distance Washer	1
*215	1483	Bearing 290, 1050 & 1550 rpm.	1
	1673	Bearing All other speeds	1
216	227293	Bearing Spacer	1
217	1673	Bearing 290, 420, 540, 700,830, 1050, 1250, 1550 rpm.	2
	1673	Bearing 2300, 3000, 3900, 4600, 5300, 6000 rpm.	1
218	227283	Spacer 290, 420, 540, 700, 830, 1050, 1250, 1550 rpm.	2
	227283	Spacer 2300, 3000, 3900, 4600, 5300, 6000 rpm.	1
219	227263	Drive Coupling 420, 540, 700, 830, 1250 rpm.	1
	227273	Drive Coupling 1050, 1550 rpm.	1
	228573	Drive Coupling 290 rpm.	1
220	227953	Spacer	1
221	227463	Bearing Spacer	1
222	227453	Chuck Spindle	1
*223	91723	Circlip	1
224	222793	Nut	1
225	157733	Gear Case	1
226	222703	Drive Spindle	1
227	157723	Motor Case	1

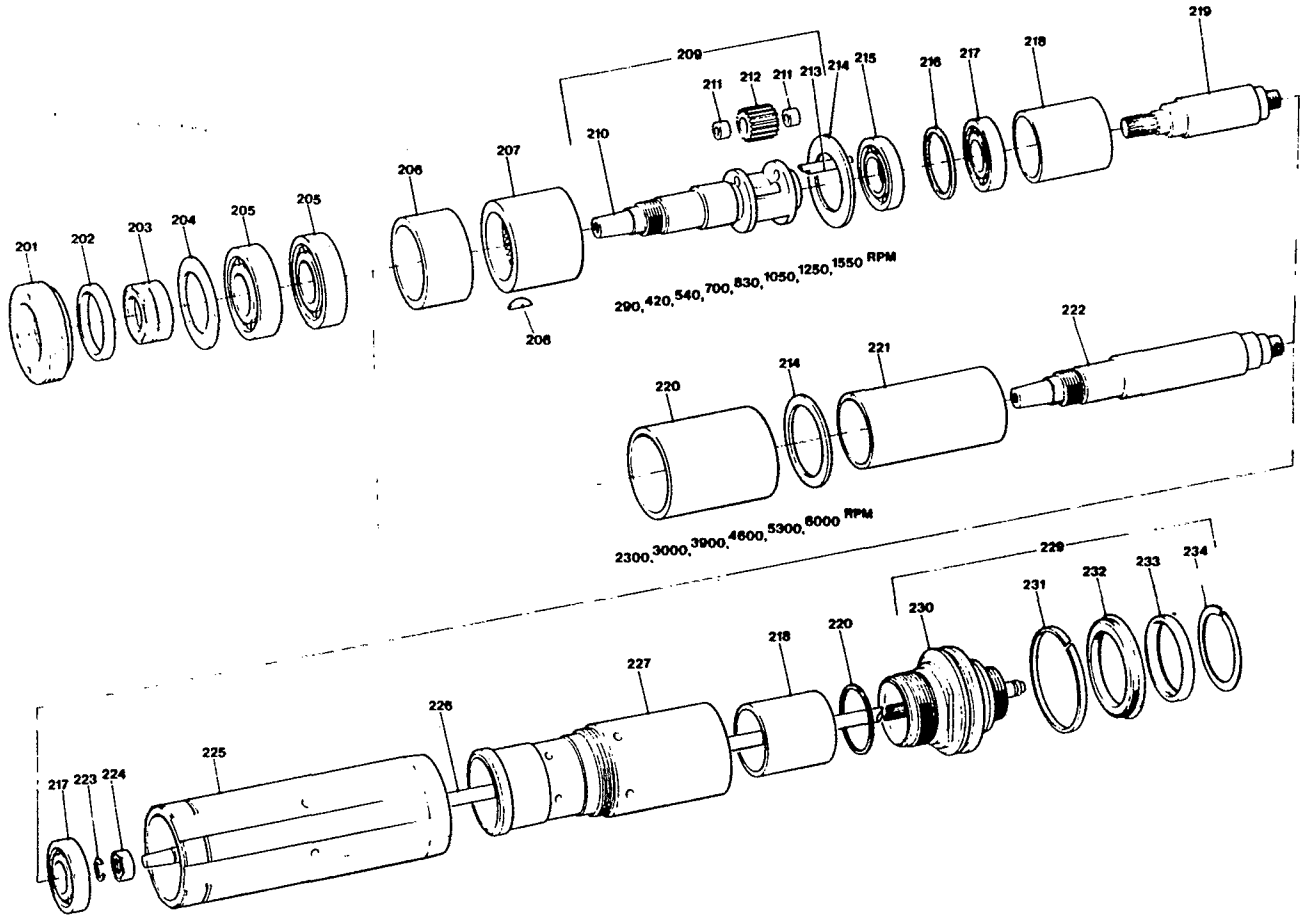

Item No.	Part No.	Description	Qty.
*228	162770053	Shim .13mm (.005 in.)	As req'd
	162770103	Shim .25mm (.010 in.)	As req'd
	162770153	Shim .38mm (.015 in.)	As req'd
229	158153	Piston Assembly	1
230	157713	Piston	1
231	158343	Wear Ring	1
*232	158283	'U' Ring	1
233	154253	Captive Washer	1
*234	158273	Circlip	1

*Indicates normal replacement items. It is recommended that adequate stocks are held for servicing requirements.

Always quote tool number, serial number and spare part number when ordering spares.

AirToolPro.com by Zampini Industrial Group - Premier Tool Suppliers Since 1987 1-800-353-4676

Parts List – Control Top

AFDE60
AFTE60

PARTS LIST – CONTROL TOP

Item No.	Part No.	Description	Qty.
*101	41523	'O' Ring	2
102	255763	Control Top with Bushes	1
103	256903	Control Panel	1
*104	40503	'O' Ring	6
105	256973	Return Valve	1
106	256933	Needle Valve	1
107	39783	Spring	3
*108	43583	'O' Ring	2
109	202773	Valve Spindle	2
110	51793	Valve Body	1
111	202833	Button - Red	1
112	203763	Stop Valve Complete	1
113	256923	Valve Body Shrouded	1
114	202843	Button - Green	1
115	256913	Start Valve Complete	1
116	236693	Plug	2
117	42953	Inlet Adaptor - 1/4in BSP	1
	47133	Inlet Adaptor - 1/4in NPT	1
118	51873	Plug	2
*119	40533	'O' Ring	1
120	51743	Valve Spindle Complete	1
121	172013	Valve Body	1
122	172003	Stroke Control Valve	1
123	257003	Valve Bush	1
*124	43463	'O' Ring	4
125	202763	Piston Control Valve	1
*126	41513	'O' Ring	3
127	202803	End Cap	1
	256823	Control Top Complete - 1/4in BSP	1
	256833	Control Top Complete - 1/4in NPT	1

*Indicates normal replacement items. It is recommended that adequate stocks are held for servicing requirements.

Always quote tool number, serial number and spare part number when ordering spares.

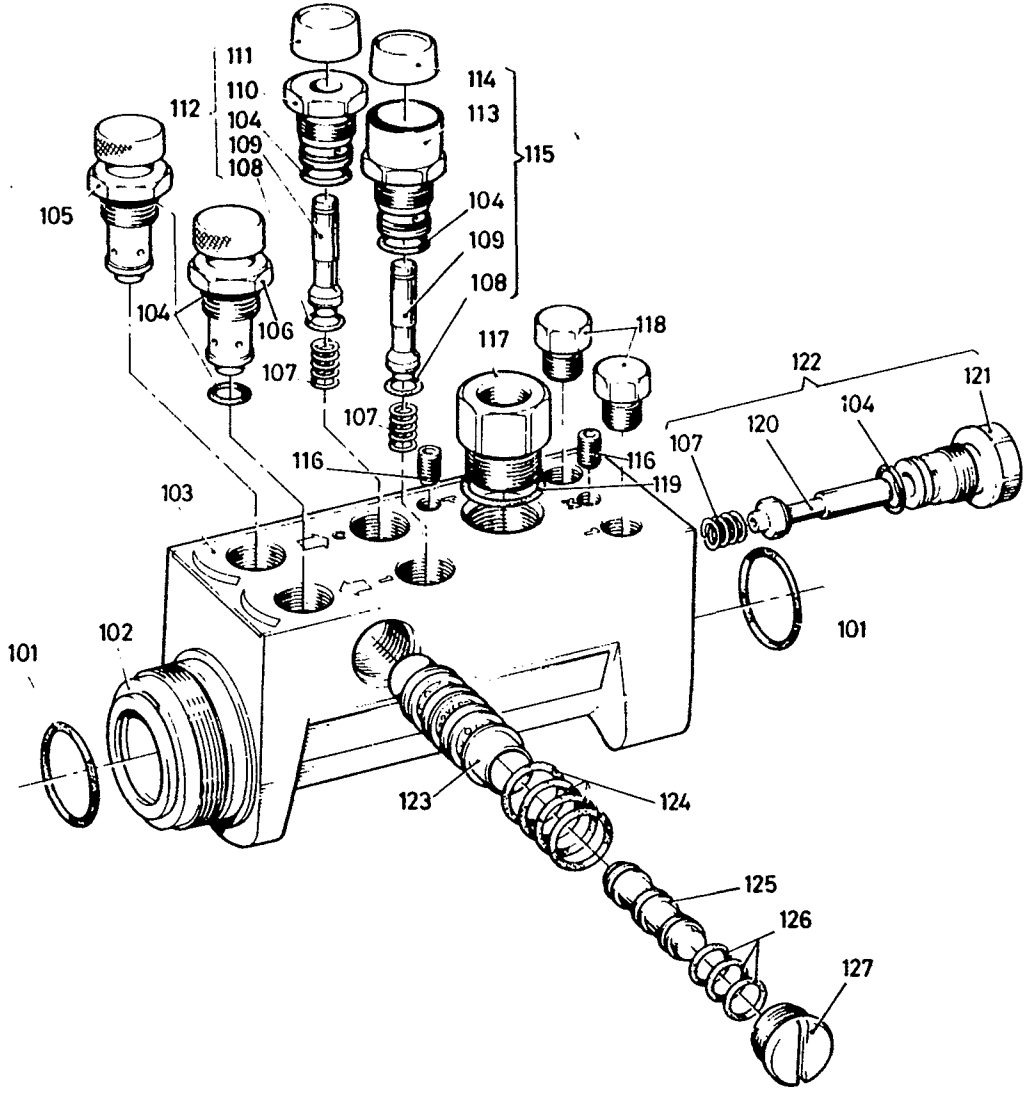

AirToolPro.com by Zampini Industrial Group - Premier Tool Suppliers Since 1987 1-800-353-4676

Chuck and Tapping Head

AFDE60
AFTE60

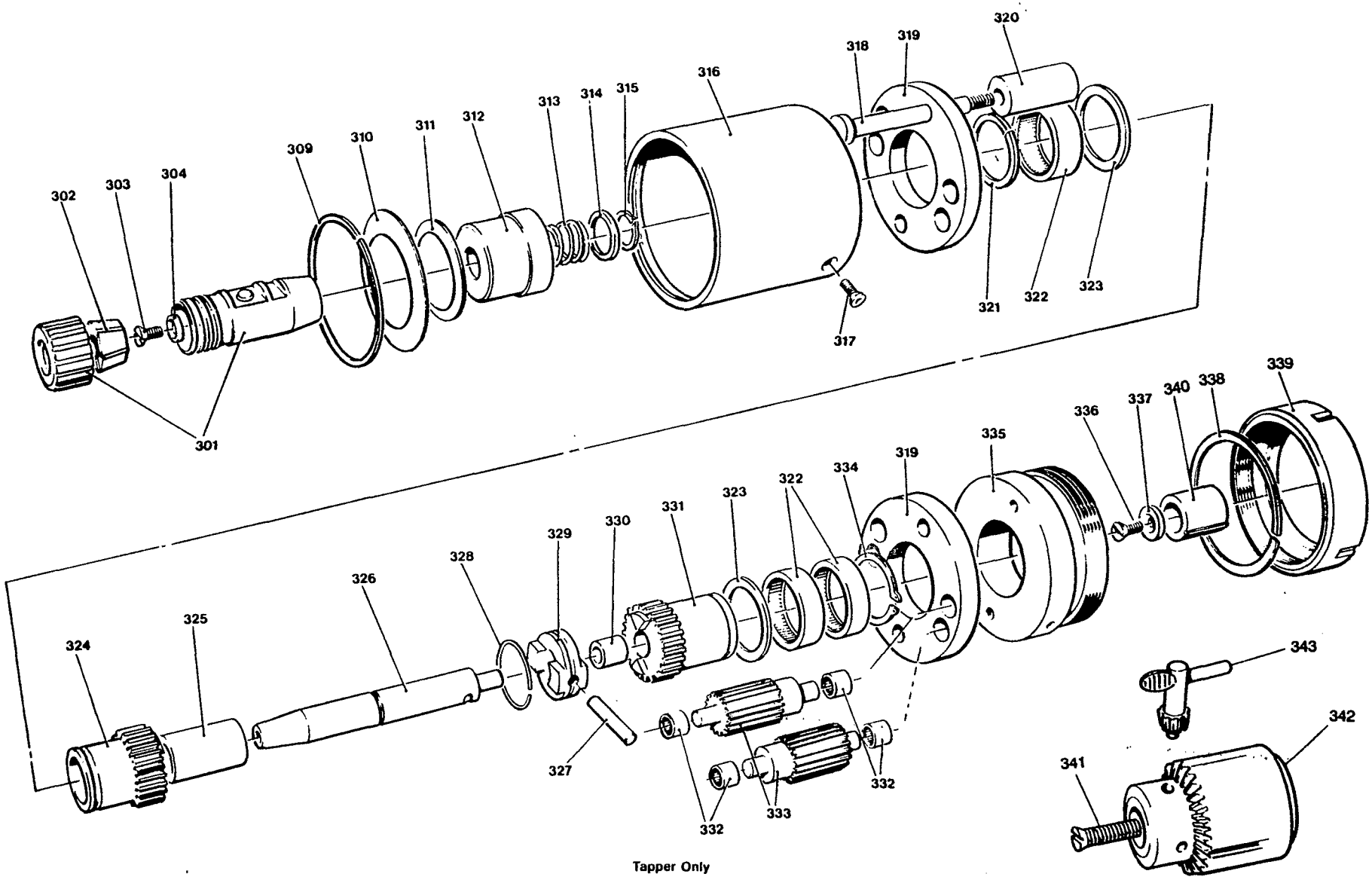

AirToolPro.com by Zampini Industrial Group - Premier Tool Suppliers Since 1987 1-800-353-4676

Servicing Instructions/Parts List – Tapping Head

AFDE60
AFTE60

TAPPING HEAD

To Dismantle

NOTE: All threads are right hand.

It is assumed that unit has been removed from drill and that keyed sleeve assembly (343) secured by washer (337) and screw (336) are left on drill spindle. Unscrew chuck nut and remove together with collet (302). Remove chuck jaws by taking out a spring ring, locking one end of threaded spindle and unscrewing spindle with $^5/_{32}$ in. (4 mm) hexagon key 17833 to expose screw (303). Insert pin punch through one of the jaw holes and tap the locking pin clear of screw. Unscrew and remove screw (303) together with retaining washer (304). Pull spindle full out (engaging reverse gear) and pack the distance between chuck and cap with suitable split distance pieces leaving sufficient space for wedges 75938. Insert one wedge to seat against spindle and enter the other from opposite side, then tap it smartly to break shaft/chuck taper, remove chuck and tools.

Prise out circlip (309) and remove disc springs (310) and (311). Remove cap (312), spring (313) and washer (314). With a $^3/_{32}$ in. (2.4 mm) hexagon key, unscrew and remove screw (317) securing barrel (316) to adaptor (335). Hold barrel in one hand and with a soft-faced mallet tap end of spindle (326) to separate internal components from barrel.

To further dismantle the components, using a $^5/_{16}$ in. (4.8 mm) hexagon key unscrew bolts (318) and remove; withdraw sleeves (320). The bearing housings (319) can now be separated freeing tandem gear assemblies (333). Remove circlip (315) and withdraw spindle (326). The driving and reverse gear assemblies can now be dismantled with reference to the exploded diagram which is self explanatory. If the bearings and bushes are to be removed, use a drift with a diameter just below the housing bore and press out in one direction, especially bushes (325).

To Assemble

NOTE: It is recommended that all removed circlips and spring rings are renewed.

Press needle bearings (332) into housings (319) so that ends are flush with housings on gear side and pack bearings with grease. Bush (330) replacement is self evident. Assemble driving gear (331) needle bearings. Fit thrust race (323) to gear and insert gear through housing (319) and lay assembly on a clean bench, gear flat with spindle upward. Press needle bearing packed with grease to seat against thrust washer, noting that it will protrude slightly from housing. Lay adaptor (335) on bench, thread uppermost, and press in the second driving gear needle bearing (322) flush with housing shoulder. Pack bearing with grease and assemble adaptor to driving gear and fit circlip (334) to secure assembly. Assemble reverse gear. Press in bushes (325) to reverse gear (324) one from each end and flush with end. Assemble thrust racer (323) to gear and insert gear into housing (319). Fit needle bearing (322) to housing (319) similar to that for the driving gear and fit circlip (321) to secure assembly. Fit spindle assembly (326) through reverse gear and retain it with circlip (315). The needle bearing protrusion from housing (319) forms a seat for cap (312).

Lay driving gear assembly on bench, gear uppermost. Assemble tandem gears (333) to housing (319) nearest one to mesh with driving gear and the other with plain shank in line with driving gear and meshing with first gear. Repeat with the other two gears 180 degrees apart. Assemble reverse gear (324) assembly to driving gear entering gear (333) spindles into needle bearings (332). Insert sleeves (320) and fit shoulder bolts (318) to secure. Tighten bolts with a $^3/_{16}$ in. (4.8 mm) hexagon key. Check for correct gear assembly by engaging spindle dog (329) with drive gear (331) dogs and rotate drive gear, the drive sequence is:—
Drive gear to first tandem gear which then drives second tandem gear which in turn drives reverse gear in opposite rotation, when satisfied pack gear assembly with grease. Assemble barrel (316) to assembly and align screwed hole in adaptor with countersunk hole in barrel, fit and tighten screw (317) with a $^3/_{32}$ in. (2.4 mm) hexagon key.

Position washer (314) on spindle (326) against circlip (315) followed by spring (313) and cap (312), press cap onto its seat. Fit disc springs (311) and (310) and secure with circlip (309) ensuring that circlip seats in its groove in barrel (316). Fit chuck to spindle and secure with washer (304) and screw (303), tighten screw with $^3/_{32}$ in. (2.4 mm) hexagon key then drive in locking pin to secure. Fit chuck jaws and spring locking ring to spindle by reversing removal procedure. Assemble collet (302) and chuck nut. When re-fitting head to tool, check that keyed sleeve (342) is in position and fitted correctly.

PARTS LIST

Item No.	Part No.	Description	Qty.
301	37842	Jacobs Tapping Chuck	1
302	36172	Collet 4.5-12 mm ($^3/_{16}$ in.-½in)	1
	39242	Collet 8-16 mm ($^5/_{16}$ in.-$^5/_8$ in.)	11
303	168893	Countersunk Screw	1
304	168683	Retaining Washer	1
*309	168763	Spring Ring	1
310	175953	Disc Spring	1
311	175673	Disc Spring	1
312	168713	Cap	1
*313	168613	Spring	1
314	168603	Washer	1
*315	168813	Circlip	1
316	168723	Barrel	1
317	168843	Socket Head Countersunk Screw	1
318	168873	Shoulder Screw	2
319	168703	Bearing Housing	2
320	168583	Sleeve	2
*321	168853	Spring Ring	1
*322	168793	Needle Bearing	3
*323	168733	Thrust Race	2
324	168743	Reversing Gear	1
*325	168573	Bush - Oil Impregnated	1
326	168693	Spindle	1
327	168783	Dog Locking Pin	1
328	168883	Retaining Ring	1
329	168593	Dog	1
*330	168773	Bush	1
331	168643	Driving Gear	1
*332	168803	Needle Bearing	8
333	202293	Internal Gear Spindle complete	4
334	175803	Circlip	1
335	168753	Adaptor	1
336	168893	Countersunk Screw	1
337	168683	Washer	1
338	168863	Spring Ring	1
339	168623	Locknut	1
340	176883	Keyed Sleeve complete	1
341	205323	Chuck Retaining Screw -6000, 5300, 4600, 3900, 3000, 2300 & 1500rpm.	1
	205313	Chuck Retaining Screw -1250, 1050, 830. 700, 540. 420 & 290rpm.	1
342	34752	Chuck -6000, 5300, 4600, 3900, 3000, 2300 &1550rpm.	1
	34332	Chuck -1250, 1050,830, 700. 540, 420 & 290rpm.	1
343	29232	Chuck Key -6000, 5300, 4600, 3900, 3000, 2300 & 1550rpm.	1
	29202	Chuck Key -1250, 1050, 830, 700, 540, 420 & 290rpm.	1

Supplied Servicing Tools

Part No.	Description	Qty.
31682	Chuck Nut Wrench	1
31692	Chuck Body Wrench	1
17833	$^5/_{32}$ in. (4 mm) Hex. Key	1
177913	'C' Spanner for locknut (339)	1

*Indicates normal replacement items. It is recommended that adequate stocks are held for servicing requirements.

Always quote tool number, serial number and spare part number when ordering spares.

AirToolPro.com by Zampini Industrial Group - Premier Tool Suppliers Since 1987 1-800-353-4676

Operating Instructions

AFDE60
AFTE60

REQUIREMENTS

Air Supply – Main

A water free and filtered air supply is required, at a pressure of 6 bar (87 lbf.in²), with a flow of 63.7 l/s (2.25 cu.ft/min) per 25 strokes; controlled by a pressure regulator selected from the Desoutter Air Line Service Equipment Catalogue.

Air Supply – Remote

The basic requirements are as above but the pressure at least 2.7 bar (40 lbf.in²) and the flow requirement when signal duration should be kept to the minimum to reduce air consumption.

Electricity Supply

The motor must be connected to a three phase supply in accordance with the VOLTAGE CHART and provided with a starter fitted with an overload protection.

Voltage Chart–3 Phase

Recommended Starter Crabtree BD Range	Voltage V	Frequency Hz	Motor Connections Links	Overload Setting
20101/HB	220 to 240	50	Delta	3.1 to 3.5 amps
20101/HB	220 to 264	60	Delta	3.3 to 3.8 amps
20101/FG	360 to 440	50	Star	1.9 to 2.4 amps
20101/FH	380 to 520	60	Star	1.9 to 2.4 amps

Connecting the Electrical Supply

WARNING: (1) ENSURE THE SUPPLY IS OFF BEFORE MAKING CONNECTIONS.
(2) STAR AND DELTA CONNECTIONS ARE TO BE STRICTLY IN ACCORDANCE WITH THE SUPPLY VOLTAGE GIVEN IN THE CHART. ANY DEVIATION FROM THE CHART WILL RESULT IN DAMAGE TO THE MOTOR.

Determine the supply voltage and refer to the voltage chart for motor connection details.

For Y (star) connection, couple terminal W2 to U2 and U2 to V2.

For Δ (delta) connection, couple terminals W2 to U1, U2 to V1 and V2 to W1.

In both methods the motor will be direct on line connected.

NOTE: The terminals are fitted with a 7 mm A/F nut and lock-nut and the connecting links are connected between the nuts. The earth connection is a 4 mm pozidrive screw for which a suitable screwdriver will be required.

IMPORTANT: Do not remove or loosen the bottom nut on the terminals.

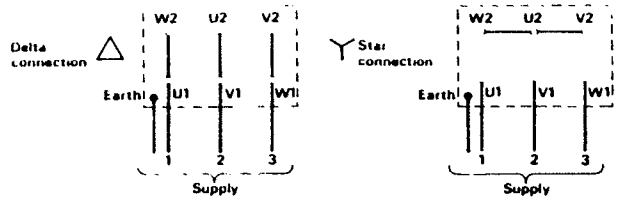

For all voltages: The supply cable (min. cable rating: armoured flexible 1.0 mm conductors) is connected to the motor terminals U1, V1, W1 and earth, which are in the terminal box (see diagram). A suitable cable clamp should be fitted; the terminal box is threaded at both sides for this purpose, (thread din 40–430 Pg 11). Plastic plugs are fitted in these and the required one can be removed using a screwdriver.

The Electric Motor

The motor is a totally enclosed, fan-cooled three-phase squirrel cage, Class F insulation. Looking at the fan end of the motor the rotation should be clockwise. If the rotation is opposite, interchange connections U1 and V1 to correct the rotation.

Lubrication

Correct lubrication is vital for maximum performance of the tool and a minature airline lubricator selected from the Desoutter Air Line Service Equipment Catalogue should be fitted into the system down stream of the filter.

Desoutter recommend the use of an ISO Viscosity Classified Oil, grade number ISO VG 15, in the lubricator.

Accessories

GUARDS: IT IS RECOMMENDED THAT SUITABLE GUARDS ARE SELECTED, FOR CHUCK AND CONTROL TOP LOCATION, FROM THE DESOUTTER ACCESSORIES CATALOGUE.

Mounting Clamps:- A range of clamps, bases and columns are available. Full details obtained from Desoutter.

Hydraulic Check Unit (H.C.U.):- The tool will function satisfactorily, when drilling a blind hole at the set feed rate. Should it be required to break through the material and possibly through into another hole, feed acceleration will occur with possible drill breakage. To obviate this, the fitment of an H.C.U. is strongly recommended. Request information from Desoutter.

Peck Feed Kits:- The Desoutter Peck Feed Drill System should be used when the depth of the hole to be drilled is five or more times the hole diameter. This helps clear drill chips and avoids excessive overheating of drill bit. Hole size accuracy can be improved and drill bit run-out can be kept to the minimum. Request information from Desoutter.

Multi-spindle Drilling and Tapping Attachments:- A series of 2, 3, 4 and 5 spindle drilling and tapping heads are available. Full details available from Desoutter.

OPERATING

Control Top (See Fig. (1))

The control top (1) contains all the control functions and signal originations for external control.

The controls and locations are identified below and detailed in the Drilling Operation.

Location 2: 'P' port tapped M5, signal point for peck feed circuit.
3: 'O' port tapped 1/8in. BSP, receives external signal to return the feed to start position.
4: Stroke Control Valve.
5: 'M' port tapped M5, signal produced when the motor is running is used for sequence control. The signal will commence after the tool has advanced 6.5mm (¼in.) and cut 6.5mm (¼in.) before the tool returns to rest. Using a suitable pressure switch this signal can be used to start and stop the electric motor.

NOTE: Refer the Contactor manufacturer for motor switching control.

6: '1' port tapped ³/₈ in. BSP, receives external signal to start the tool cycle.
7: Main air inlet port, tapped ¼ in. BSP or NPT.
8: Manual Start Button - Green.
9: Manual Stop Button - Red.
10: Advance Rate Regulating Screw.
11: Retract Rate Regulating Screw (Tapper only).

NOTE: The 'M' port is intended for the operation of pilot valves. It must not be used as a source of air supply for other uses.

Mounting the Tool

The tool must be clamped only in the area indicated on the outer case.

The drill must be at least 6 mm (0.25in.) above the work piece.

AirToolPro.com by Zampini Industrial Group - Premier Tool Suppliers Since 1987 1-800-353-4676

Operating/Servicing Instructions

AFDE60
AFTE60

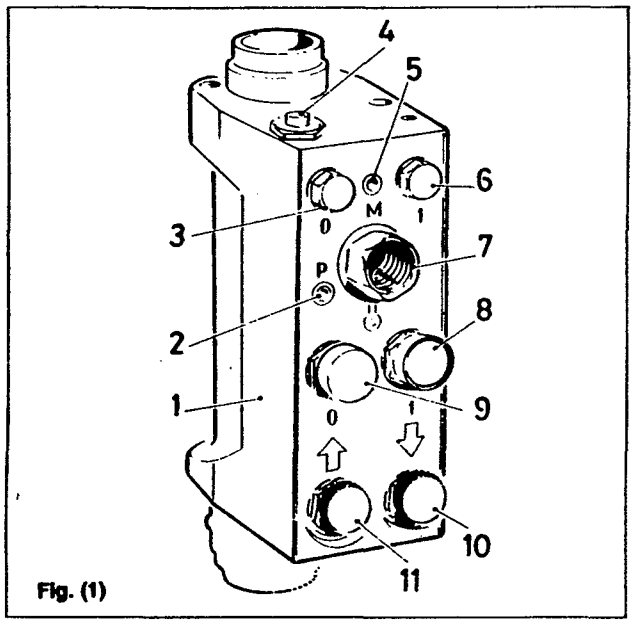

Fig. (1)

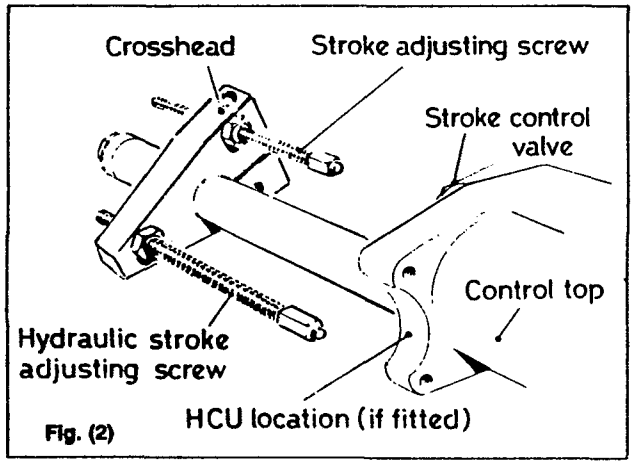

Fig. (2)

WARNING: (1) ALWAYS DISCONNECT TOOL FROM THE POWER SUPPLY BEFORE ATTEMPTING ANY REPLACEMENT, ADJUSTMENT, SERVICING OR DISMANTLING.
(2) ENSURE THAT NO LOOSE ARTICLES OF CLOTHING OR CLEANING MATERIAL CAN BE CAUGHT BY THE ROTATING PARTS OF THE TOOL.
(3) ALWAYS ALLOW THE TOOL TO STOP BEFORE REMOVING WORK OR RESTING TOOL.
(4) ENSURE THAT WORK PIECE IS SECURELY CLAMPED BEFORE COMMENCEMENT OF OPERATION – CLEAR ALL LOOSE ITEMS FROM VICINITY.

SETTING DRILLING OPERATION (See Fig. (1) & Fig. (2))

NOTE: This setting details a unit with a H.C.U., reference to the H.C.U. should be ignored when setting the standard tool.

Set the gap between the stroke control valve and the stroke adjusting screw to equal the depth of drilling required PLUS the distance the drill bit is above the work piece.

Unscrew the hydraulic stroke adjusting screw away from the H.C.U. and adjust the resistance within the H.C.U. to the minimum position.

Fully open the retract rate regulating screw.

Close the advance rate regulating screw.

Connect the air supply and press the manual start button.

Nothing will happen until the advance rate regulating screw is slowly opened, then the drill will gradually advance and approximately 6 mm (0.25in.) from start of advance the drill bit will rotate.

Close the advance rate regulating screw approximately 1.0 mm (0.040in.) before the stroke adjusting screw contacts the stroke control valve.

Set the hydraulic stroke adjusting screw to contact the H.C.U. and lock in position.

Unscrew the advance rate regulating screw; the tool will advance, under the control of the H.C.U. until the stroke control valve is contacted by the stroke adjusting screw at this point the tool will return to the start position and stop.

Carry out a set of trial drillings to determine the ideal advance and H.C.U. settings. Stalling on 'break-through' indicates that the H.C.U. is coming into operation too late or the advance rate is too fast.

SETTING TAPPING OPERATION

NOTE 1: It is important that the advance rate of the tool is set to match the pitch of the thread which is to be tapped. An incorrect advance rate will result in a deformed thread, this will be more noticeable in plastics or light alloy materials.

2: The retract rate should be set to withdraw the tap at a slightly faster rate than it advanced, this will insure a clean withdrawal.

Mount the tool, with the selected tap securely retained in the chuck, above a test block to carry out sample tapping operations.

The end of the tap MUST be at least 14 mm (9/16in.) above the test block, to allow for the tapping head reversing engagement travel. Set the gap between the adjusting screw and the retract valve to equal the tapping depth PLUS the distance the tap is above the work piece.

Set the advance rate adjustment screw 1 turn open and the retract rate adjustment screw 1½ turns open.

Carry out a trial tapping operation and inspect the finished thread form, adjust as necessary the advance/retract screws and repeat until information in NOTES 1 and 2 are satisfied.

SERVICING REQUIREMENTS

General Notes

Replace as necessary all 'O' rings, seals and bearings.

Use the following lubricants as indicated:-

Oil - ISO VG 15 or equivalent.
Grease - Rocol BRB1200 for bearings.
Grease - Duckhams Q5618 or equivalent.
Grease - Molykote PG75 Plastislip, for 'O' rings & seals.

The majority of threads in this tool are right hand (R.H.) but some left hand (L.H.) threads will be found. All L.H. threads will be noted in the text.

Servicing Tools

In addition to the normal range of workshop tools the following will be required:

Part No.	Description	Qty.
75948	Wedge	1 pr.
172873	Clamp Blocks	1 pr.
172913	Bearing Sleeve Tool (Comprising of screwed rod, ½ in. Whit. Nut, Cylinder and Slotted Plate)	1
204943	Hexagon Wrench 5 mm A/F	1
204903	Hexagon Wrench 4 mm A/F	1

AirToolPro.com by Zampini Industrial Group - Premier Tool Suppliers Since 1987 1-800-353-4676

Servicing Tools (cont.)

# 5623	Spanner 0.5 in. A/F	2
17843	Hexagon Wrench 3/16 in. A/F	1
# 16613	Spanner (for Retainer 46)	1
225423	Pulley Clamp Blocks	1 pr.
172863	'C' Spanner (for Bearing Sleeve 1)	1
177913	'C' Spanner ,for Item 339	1
# 18583	Spanner, for items 61 & 224	1
# 16613	Spanner for planet cage (210) and chuck spindle (222)	1
# 9263	Pin Spanner for clamp nut (201)	1
172833	Ring Spanner for spindle nut (203)	1
172883	Motor Case Clamp Blocks (pair)	1
172893	Gear Case Spanner	1
172903	Spanner for piston (230)	1

Refer to the Parts Lists for illustrations and item references.

Cleaning

Required: Tank to immerse components.
Good quality clean paraffin.

Soak the components in the tank ensuring full immersion, agitate the component to ensure that any air passages are flushed through. After soaking, remove from the tank and thoroughly dry. Blow through any air passages to remove all moisture. Keep all cleaned components in an airtight container until required.

GENERAL ASSEMBLY

To Dismantle

Assemble the tool in clamp blocks and clamp in a vice, motor uppermost. Remove the four screws (19) nuts (34) and washers (33). Discard the washers. Remove the motor (38) complete with the mounting plate (35). To remove the pulley (32) remove the retaining screw (29) and washer (30). Withdraw the pulley leaving the key (36) in position, unless it is to be renewed. To remove the motor mounting plate remove the four screws (31). To remove the spacer (37) the key (36) must be removed first.

Unscrew and remove the tie rod nut (69). Loosen tie rod crosshead (68) clampingscrew(66) and remove the crosshead. Unscrew and remove the tie rod locknut (67).

Loosen the crosshead (65) clamping bolt (66) and remove the crosshead complete with adjusting screw (63), stroke adjusting screw (62) and locknuts (64).

Using 'C' spanner unscrew (LH) the outer locking case (39). Withdraw control top assembly (56) followed by the outer locking case and spacer (41). Remove spacer (43) from outer locking case (39) and spacer (41) from air feed tube. Remove and discard the 'O' rings from the spacers.

Hold the air feed tube and carefully unscrew the retainer (46) L.H. simultaneously clearing it from the air feed tube as it unscrews, while keeping upward pressure on the retainer to maintain contact with thrust washer (47). When clear of the air feed tube, release the retainer to free the fire balls (48), catch them in hand. Discard the balls. Remove and discard bearing (52) from the bore of the air feed tube. Remove shims (53), note thickness, then discard.

Remove the tool from the vice and clamp and place on a work bench. Remove pin (51). Unscrew the nut (50) releasing the thrust washers (47) and (49), and the retainer which should be removed from the drive spindle. Remove the oil seal from the retainer. Discard oil seal and thrust washers.

Remove the chuck if fitted. Replace the tool in clamp blocks and clamp in a vice, motor mounting orifice uppermost.

Remove the six pulley housing screws (28) and remove the top pulley housing (27). Remove and discard the small 'O' ring (14). Remove the drive belt (26). Disengage driven pulley assembly (22) or (25) and remove.

To dismantle 26T driven pulley assembly:-

Mount pulley (22) in clamp blocks and clamp in a vice. Unscrew clamp nut (24) from pulley spindle (21). Remove rear bearing (23) and remove the pulley spindle. Remove the pulley from the clamp blocks and push off front bearing (20).

To dismantle 20T driven pulley assembly:-

Using either bench vice or press and suitable blocks, remove front and rear bearings (20) and (23).

Dismantle continued:-

Using the bearing sleeve tool remove the bearing sleeve (1) from the case.

CAUTION: The bearing sleeve supports the return spring which is preloaded, exercise extreme care when removing the sleeve.

Remove the silencing ring (2) and return spring (3).

Pull gearbox from outer case. Unscrew and remove case (5). Remove and discard 'O' ring (9). Remove the clamp nut (6) threaded collar (7) and tie rod (58). Remove and discard 'O' ring from clamp nut.

Remove the top visible circlip (17) from the spindle tube (13). Remove the spindle tube and remove the second circlip.

Remove the four grub screws (11) from the casting adaptor(10) and remove theadaptor. Separate the guide tube (16) from the adaptor and remove, discard 'O' ring (15) from guide tube and 'O' ring (14) fromadaptor. Remove and discard 'O' rings (12) and (8).

NOTE: Dismantling the control top and the motor and gearbox assembly are detailed later in the text.

To Assemble

Clamp gearbox assembly in a vice, drive spindle vertical. Fit 'O' ring (8) to clamp nut (6), guide clamp nut over drive spindle and screw to gearbox piston. Fit an 'O' ring (8) to bottom pulley housing (27). Fit a circlip (17) to lower groove of spindle tube (13) and fit to bottom pulley housing, then fit top circlip (17) to secure. Screw on threaded collar (7) complete with tie rod (58), one thread only to clampnut. Fit 'O' ring (14) to casting adaptor (10). Fit 'O' ring (15) to guide tube (16) then insert guide into its casting adaptorseat so that its collar rests against the ledge above 'O' ring (16). Fit 'O' ring (12) to the adaptor fit 'O' ring (8) to the bottom pulley housing (27), and fit the pulley housing spigot into adaptorensuring that the guide tube smoothly enters its bore in the pulley housing.. Fit the assembly over the drive spindle and tie rod, seating the pulley housing on the clamp nut (6) mating spigot. Coat tie rod (58) with grease. Using four grub screws (11) lock the adaptorto bottom pulley housing.

Assemble 'O' ring (9) to the casting adaptorand screw on outer case (5). Fit clamp blocks and clamp the tool horizontal in vice. Lubricate return spring (3) and fit into outer case. Assemble lubricating ring (2) to bearing sleeve (1). Using the bearing sleeve tool fit the bearing sleeve(1).

Assemble Driven Pulley 20T:-

Pack bearings (20) and (23) with grease and press onto the pulley (25).

Assemble Driven Pulley 26T:-

Pack bearing (20) with grease and press onto the pulley spindle (21). Assemble the pulley (22) onto the spindle. Pack bearing (23) with grease and fit to the pulley spindle then screw on the clamp nut (24).

Fit the appropriate assembled pulley on to the gearbox drive spindle. Fit the appropriate belt (26) over assembled pulley. Coat 'O' ring (14) with grease and fit to the top pulley housing (27). Carefully fit the top pulley housing, ensure that bearing (23) is correctly seated. Secure the top pulley housing using six screws (28).

AirToolPro.com by Zampini Industrial Group - Premier Tool Suppliers Since 1987 1-800-353-4676

Servicing Instructions

AFDE60
AFTE60

Fit new bearing (52) to the air feed tube ensuring that it seats hard up against its outer race. Fit new oil seal (45), steel shell first, to retainer (46) and assemble it to the drive spindle. Assemble new thrust washers (47) and (49) to drive spindle then screw on nut (50). Reposition the tool vertically in the vice. Insert two new balls (48) between the thrust washers, 180 degrees apart, push up the retainer to hold the thrust washers and balls against the nut (50). Sight the balls between the thrust washers, the balls should be central in the shaft groove, adjust as necessary by turning nut (50). Align the slots in the nut with the shaft pin hole. Release the retainer and remove the balls. Remove the tool from the vice and lay it on a bench. Insert pin (51), drive in pin so that the protrusion each side is equal. Position the clamps and clamp the tool vertical in the vice.

Assemble five balls (48) to their seatings between the thrust washers and hold them in position with the retainer (46). Insert the assembly into the air feed assembly and while keeping the pressure on the thrust washers, screw in the retainer as tight as possible by hand. Hold the air feed tube flat with a spanner and with a 30mm A/F spanner tighten the retainer. Re-position the tool horizontal.

Set a dial test indicator against the end of the air feed tube, apply pressure to the air feed tube taking up all play between air feed tube and drive spindle, then set the gauge to zero. Restrain drive spindle and check the movement between drive spindle and air feed tube.

When the retainer (46) is tightened to 20 - 27 Nm., the axial movement should be approximately 0.25 mm (0.010 in.). This can be achieved by fitting shim (s) (53) as required.

Turn tool vertical in the vice.

Grease the two 'O' rings (42) and (44) and fit to inner spacer (43). Fit spacer in its recess in the top pulley housing. Grease two 'O' rings (40) and assemble one at each end of spacer (41) and insert into the outer locking case (39). Fit the assembled outer case to the top pulley housing and screw on, L.H., ensure that spacer (41) contacts the pulley housing. Coat 'O' ring (59) with grease and fit to the air feed tube. Coat the air feed tube lightly with grease and slide the control top (56) complete with adaptor (54) over the air tube until its thread contacts the outer locking case. Hold the locking case with a 'O' spanner screw in control top until it locks. Remove tool from vice and clamps and hold the tool with top of air feed tube against a firm surface and apply force against spring pressure to check that full stroke can be obtained manually.

Refit tool in clamps and vice, and clamp it vertical. Fit cross-head complete with adjusting screw (63) stroke adjusting screw (62) and their locknuts (64) tighten clamp screw (66).

Fit tie rod locknut (67) to the tie rod (58). Fit the tie rod crosshead (68) to the air feed tube and tighten clamping bolt (66).

Pull the air feed tube (61) towards the rear until the end play is fully taken up. Holding still, screw on the tie-rod nut (69) until contact with crosshead (66) is made.

Tighten the tie-rod nut (69) a further 0.13 mm (0.05 in.) approximately (ie; 1/6th of a turn), so that the end play is reduced to 0.13 mm then, secure with the tie rod locknut (67).

Assemble spacer (37) over motor spindle then fit key (36). Fit appropriate pulley (32) to motor spindle, ensure that key and keyway are lined up, secure using screw (29) and washer (30). Carefully fit the motor assembly, ensure that the top pulley picks up the belt correctly. Refer to 'Belt Tensioning' and proceed as detailed. After tensioning, Test Tool as detailed in Section

CONTROL TOP

To Dismantle

Unscrew and remove inlet adaptor (117), with any customer fitted connection. Unscrew end cap (127) exposing valve bush (123) and piston control valve (125). Using a thin wire hook pull out the valve bush with the piston control valve. Separate the valve from the bush and discard all 'O' rings.

The remainder of the dismantling is obvious with reference to the illustration. It is suggested that as each valve is removed it is placed in a container and identified for future use.

To Assemble

Assemble 'O' rings (126) to piston control valve then slide valve into the control valve bush (123) Fit 'O' rings (124) to valve bush and carefully fit the bush/valve assembly into the control top. Screw in end cap (127) and tighten to a torque of 10.8 to 13.5 Nm (8 to 10 lbf/ft).

Refer to the illustration for locating the remaining valves and components noting the following points:

Position a spring (107) on the spigot of each button assembly (112 & 115) and stroke control valve (122) before assembly into control top.

Tighten all valves and plugs to a torque of 8.5 to 9.0 Nm (75 to 80 lbf/in.).

Tighten inlet adaptor (117) to a torque of 31.0 to 36.0 Nm (23 to 27 lbf/ft).

Ensure that 'O' rings (101) are greased before placing in their housings in control top bore. Place assembled control top in an airtight container until required, see General Assembly for details.

GEARBOX ASSEMBLY

To Dismantle

As the unit has already been partly dismantled, see General Assembly, it is only necessary to remove the piston (230) and the clamp nut (201) then push the internal components out of the motor case (227).

The gearbox assemblies can be dismantled using normal work-shop practise when removing bearings from spigots. Identify your gearbox in the illustration and refer to it for order of dismantling.

NOTE: Spindle Nut (203) has a R.H.thread all other threads in this area are L.H.

To Assemble

Refer to the illustration to identify the components in the gearbox and order of assembly. Grease the bearings and gears on assembly. Tighten spindle nut (203) to a torque of 8.4 to 9.0 Nm. (75 to 80 lbf/in.).

Belt Tensioning

Fit clamp blocks to tool and clamp the tool vertical in vice with motor uppermost and pulley housing outward. Loosen the four motor clamping screws using a ring spanner on nut and a hexagon key on screw head.

Hold belt adjusting tool and push the knurled knob to top of slot away from location pins. Engage the knurled knobs threaded spindle with threaded hole in end of motor plate. Screw in spindle to motor plate untillocationsare aligned with the two mating holes at the bottom of the lower pulley housing. Push the adjuster up to engage the locating pins in the housing holes. Continue to turn the knurled knob and at the same time, rotate the chuck until the locking pin engages with tool lug preventing any further rotation of knob. Fully tighten the four motor clamping screws to lock motor in position. Push the belt adjusting tool downwards to disengage the locating pins and unscrew and remove the adjusting tool. Remove the tool from vice and clamps.

Changing the Drive Belt

NOTE: Refer to General Assembly for dismantling procedures.

Assemble the tool in a clamp and clamp horizontally in a bench vice. Remove the motor and the complete crosshead. Remove the top pulley housing by releasing the six screws. Remove the old belt, check that the new belt is the correct replacement. Fit the belt to the housing ensuring that it seats on the driven pulley.

Turn the tool in the vice so that it is vertical. Refit all removed parts, refer to General Assembly. Refer to Belt Tensioning and tension the belt as detailed.