ALL CLAMP NUTS ARE 1 1/8
NO SERVICE TOOL AVAILABLE

Desoutter™

Desoutter Limited, London, NW9 8ND

AFDE62/AFTE62

Servicing Instructions
(GB) Parts List
Operating Instructions
Wartungsanleitung
(D) Teileliste
Bedienungsanleitung
Manuel d'entretien
(F) Liste de pièces
Manuel d'utilisation
Instructions de Servicio
(E) Listas de Repuestos
Instrucciones de Operación
Instruções de Manutenção
(P) Listas de Peças
Instruções de Funcionamento
Instruzioni per la Manutenzione
(I) Elenco delle Parti
Instuzioni Operative
Οδηγίες Συντήρησης
(GR) Κατάλογοι Ανταλλακτικών Μερών
Οδηγίες Λειτουργίας
Onderhoudsinstructies
(NL) Onderdelenlijst
Bedieningsinstructies
Servicevejledning
(DK) Liste over dele
Betjeningsvejledning
Serviceinstruktioner
(N) Delelister
Driftsinstruksjoner
Serviceinstruktioner
(S) Reservdelslista
Bruksanvisning
Huolto-ohjeet
(FIN) Osaluettelo
Käyttöohjeet

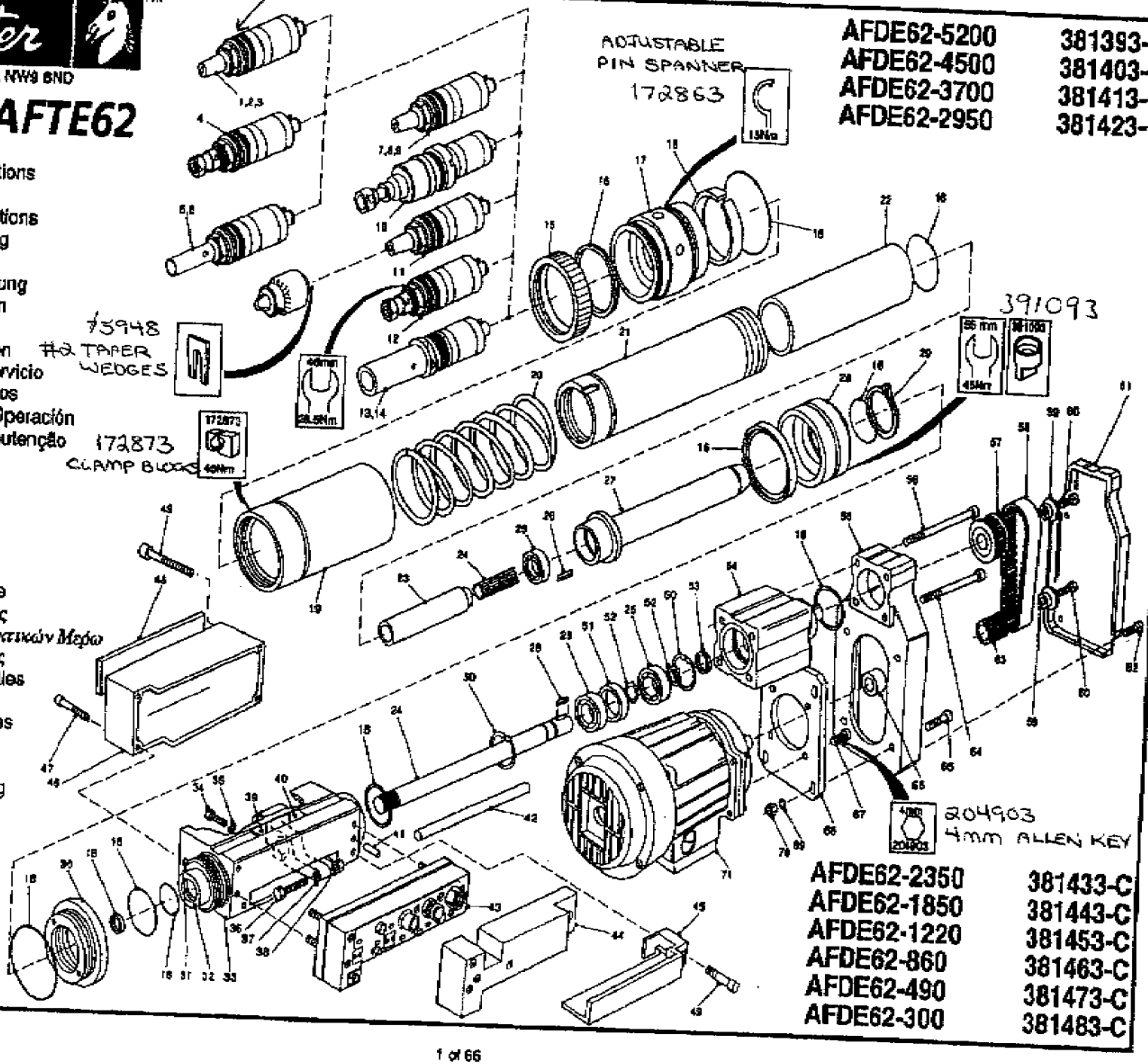

AFDE62-5200	381393-C
AFDE62-4500	381403-C
AFDE62-3700	381413-C
AFDE62-2950	381423-C
AFDE62-2350	381433-C
AFDE62-1850	381443-C
AFDE62-1220	381453-C
AFDE62-860	381463-C
AFDE62-490	381473-C
AFDE62-300	381483-C

Printed in England

Part No. 362723 Issue 1 7.95

Parts List/Teileliste/Liste de Pièces

Desoutter™

Desoutter Limited. London NW9 6ND

Item No. Pos. Nr. No. Article	Part No. Teil. Nr. Référence	Description	Qty Menge Qté
1	382813	P24 Output	1
2	384073	P32 Output	1
3	384093	P16 Output	1
4	384113	P2 Output	1
5	384133	P3 Output	1
6	384153	P33 Output	1
7	326593	B24 Output	1
8	355263	B32 Output	1
9	368163	B16 Output	1
10	92882	B8 Output	1
11	327723	B1 Output	1
12	326573	B2 Output	1
13	326583	B3 Output	1
14	356373	B33 Output	1
15	173463	Cap	1
*16	391043	Seal Kit	1
17	381523	Sleeve	1
18	381543	Felt Ring	1
19	381583	Case	1
20	381593	Spring	1
21	381563	Quill	1
22	381573	Spacer	1
23	322133	Drive Sleeve	1
24	322143	Driveshaft	1
*25	369933	Bearing Kit 3893	1 33
26	322293	Key	3
27	381693	Tube	1
28	381613	Piston	1
29	382363	Circlip	1
30	381663	Ring	1
31	322303	Pin	1
32	381513	Bush	1
33	381503	Housing	1
34	226003	Screw	2
35	6512	Washer	2
36	322493	Screw	1
37	381493	Crosshead	1
38	223203	Nut	1
39	355693	Nameplate	1
40	54853	Screw	2
41	381653	Pin	1
42	381683	Rod	1
43	324143	Control Block	1
43	324143	Control Block	1
44	103862	Control Block	1
45	326653	Cover	1
46	325103	Cover	1
47	236273	Screw	1
48	286393	Label	1
49	236313	Screw	2
50	113173	Circlip	2
51	322203	Spacer	1
52	200703	Circlip	2
53	322213	Spacer	1
54	323913	Gearbox	1
55	322223	Housing	1
56	209493	Screw	2
57	301633	Pulley (40T)	1
	(5, 200 RPM)		
	(860 RPM)		
	301663	Pulley (40T)	1
	(4, 500 RPM)		
	(1, 220 RPM)		
	301923	Pulley (27T)	1
	(3, 700 RPM)		
	301853	Pulley (26T)	1
	(2, 950 RPM)		
	(490 RPM)		
	301693	Pulley (20T)	1
	(2, 350 RPM)		
	301863	Pulley (16T)	1
	(1, 850 RPM)		
	(300 RPM)		
58	301683	Belt (78T)	1
	(4, 500 RPM)		
	302013	Belt (73T)	1
	(1, 220 RPM)		
	301943	Belt (71T)	1
	(3, 700 RPM)		
	(2, 950 RPM)		
	(490 RPM)		
	301953	Belt (66T)	1
	(1, 850 RPM)		
	(300 RPM)		
	302003	Belt (68T)	1
	(2, 350 RPM)		
	301973	Belt (62T)	1
	(5, 200 RPM)		
	(860 RPM)		
59	382363	Washer	2
60	223113	Screw	2
61	322233	Cover	1
62	229353	Screw	4?
63	322283	Pulley (16T)	1
	(1, 220 RPM)		
	322273	Pulley (20T)	1
	(3, 700 RPM)		
	322263	Pulley (26T)	1
	(5, 200 RPM)		
	(4, 500 RPM)		
	(2, 950 RPM)		
	(2, 350 RPM)		
	(1, 850 RPM)		
	(850 RPM)		
	(490 RPM)		
	(300 RPM)		
64	229363	Screw	2
65	223193	Screw	4
66	222803	Spacer	1
67	229353	Screw	4
68	238163	Mounting Plate	1
69	223163	Washer	4
70	223203	Nut	4
71	239003	Motor	1
	(381393)		
	(381403)		
	(381413)		
	(381423)		
	(381433)		
	(381443)		
	(381453)		
	(381463)		
	(381473)		
	(381483)		
	325143	Motor	1
	(384183)		
	(384213)		
	(384223)		
	(384233)		
	(384243)		
	(384253)		
	(384263)		

Printed in England

Part No. 382723 Issue 1 7.95

Gearbox/Getriebe/Boîte De Vittesses

Desoutter™

Desoutter Limited, London NW9 8ND

323913

Item No. Pos. Nr. No. Article	Part No. Teil. Nr. Référence	Description	Qty Menge Qté
1	322363	Housing	1
2	322333	Case	1
3	25563	Key	1
4	322313	Cage	1
5	60993	Bearing	6
6	322323	Wheel	3
7	322303	Spacer	1
8	113203	Washer	1
*9	116973	Bearing	2
10	322203	Spacer	1
11	200703	Circlip	2
12	113173	Circlip	1
*13	329383	Spacer	1
14	322213	Shaft	1
15	322353	Key	1
16	322293	Seal	1
17	322543	Screw	2
18	322533	Screw	2

322363

381623

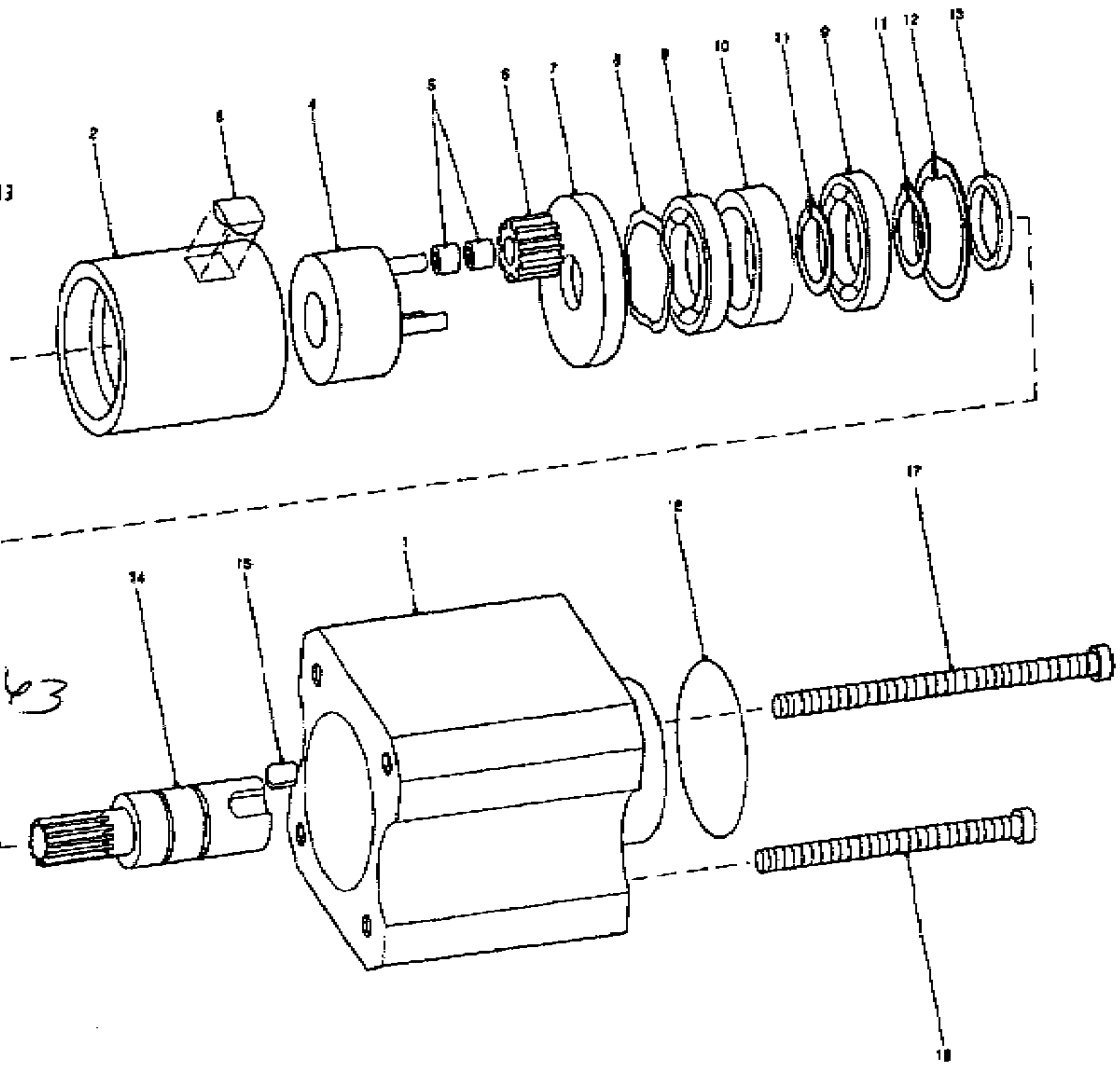

Control Blocks/Blocs de Commande/Steuerblöcke

Desoutter™

Desoutter Limited, London NW9 6ND

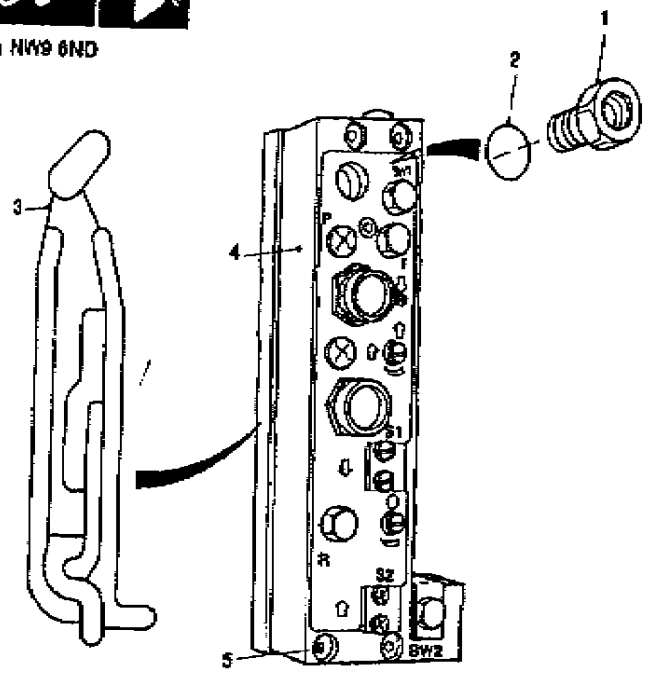

324148

Item No. Pos. Nr. No. Article	Part No. Teil. Nr. Référence	Description	Qty Menge Qté
1	47133 (½in NPT)	Adaptor	1
	42953 (¼in BSP)	Adaptor	1
2	99853	O-Ring	1
3	370393	Seal	1
4	364693	Block	1
5	273653	Screw	4
	Service kit		
6	370943	Seal Kit	1

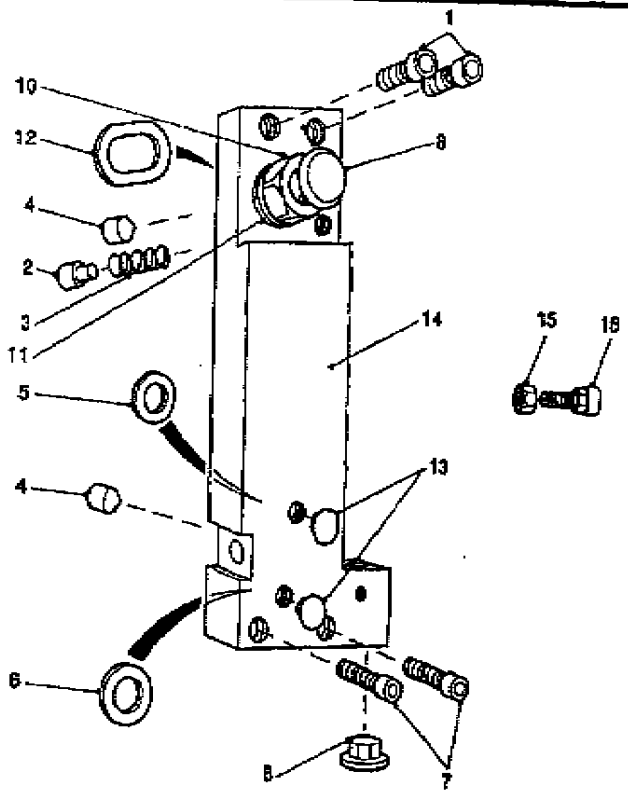

103862

Item No. Pos. Nr. No. Article	Part No. Teil. Nr. Référence	Description	Qty Menge Qté
1	236353	Screw	2
2	381243	Pin	1
3	51883	Spring	1
4	325073	Pin	2
5	113413	O-Ring	1
6	200713	O-Ring	1
7	236373	Screw	2
8	388513	Plug	2
10	42953	1/4 BSP Inlet	1
11	99853	O-Ring	1
12	64093	O-Ring	1
13	389733	Plug	2
14	381193	Block	1
15	223203	Nut	1
16	383983	Screw M6	1

Output Modules/Modules de Sortie/Ausgabemodule

Desoutter™

Desoutter Limited, London NW9 8ND

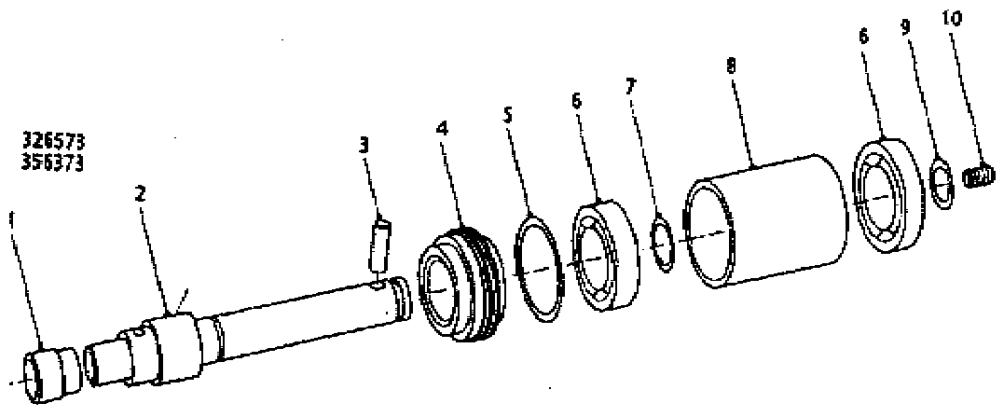

326573-B2

Item No. Pos. Nr. No. Article	Part No. Teil. Nr. Référence	Description	Qty Menge Qté
1	116903	Nut	1
2	322413	Shaft	1
3	328343	Pin	1
4	322973	Nut	1
5	500993	O-Ring	1
6	116973	Bearing	2
7	200703	Circlip	1
8	349983	Spacer	1
9	500963	O-Ring	1
10	209953	Screw	1

355263-B82
326593-B24
327723-B1
368116-B16

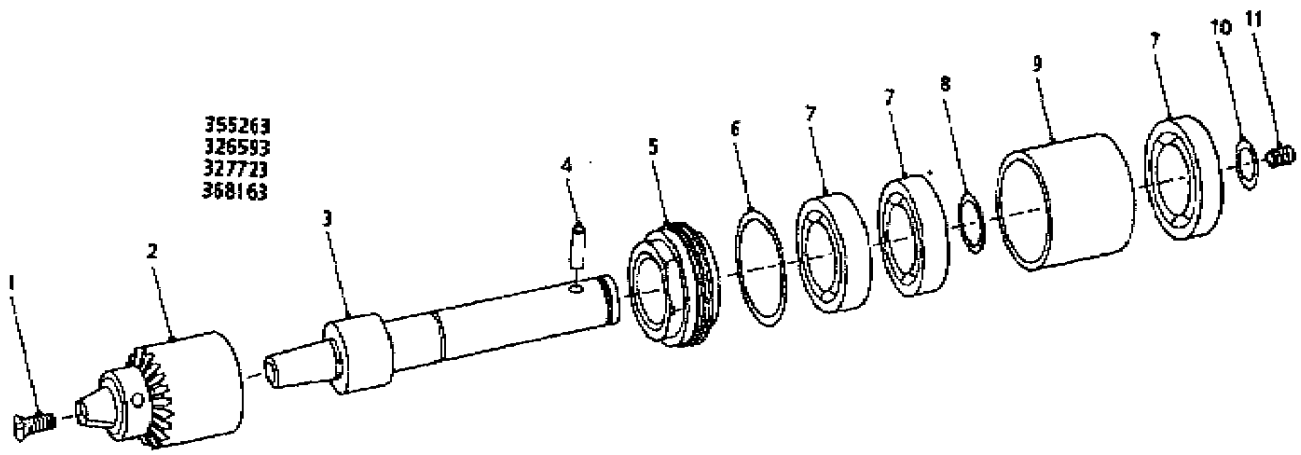

Item No. Pos. Nr. No. Article	Part No. Teil. Nr. Référence	Description	Qty Menge Qté
1	327713	Screw	1
2	34752 (327723)	Chuck	1
3	355273 (355263)	Shaft	1
	322413 (326593)	Shaft	1
	322993 (327723)	Shaft	1
	368153 (368163)	Shaft	1
4	328343	Pin	1
5	322073	Nut	1
6	500993	O-Ring	1
7	116973	Bearing	3
8	206703	Circlip	1
9	322103	Spacer	1
10	500963	O-Ring	1
11	209953	Screw	1

Desoutter Limited. London NW9 6ND

Unscrew (8) away from the HCU to adjust the resistance within the HCU to the minimum.

Fully open the Figure 3 (13).

Close Figure 3 (11).

Connect the air supply and press Figure 3 (6).

Adjust figure 3 (11/13) to give required advance, retract feeds for the operator.

Use Figure for the final depth adjustment 5 (9).

Lock using Figure 5 (10).

Carry out a set of trial drillings to determine the ideal advance and HCU settings using Figure 3 (11).

⚠ ENSURE COVERS ARE REFITTED.

SETTING TAPPING OPERATION

NOTE: 1. It is important that the advance rate of the tool is set to match the pitch of the thread which is to be tapped. An incorrect advance rate will result in a deformed thread, this will be more noticeable in plastics or light alloy materials.

2. The retract rate should be set to withdraw the tap at a slightly faster rate than it advanced, this will ensure a clean withdrawal.

Mount a tool, with the selected tap securely retained in the chuck, above a test block to carry out sample tapping operations.

The end of the tap MUST be at least 14mm (9/16in) above the test block, to allow for the tapping head reversing engagement travel. Set the gap between Figure 5 (2) and (1) to equal the tapping depth PLUS the distance the tap is above the work piece.

Adjust Figure 3 (11/13) to give the required advance, retract feeds for the operation.

⚠ ENSURE COVERS ARE REFITTED.

Carry out a trial tapping operation and inspect the finished thread form, adjust as necessary Figure 3 (11/13) and repeat until information in NOTES 1 and 2 are satisfied.

SERVICING REQUIREMENTS

General Notes

Use the following lubricants:

Grease - BP FG00 EP, for bearings.
Grease - Duckhams Type Q5616, for gears, splines and threads.
Grease - Molykote PG75 Plastislip, for 'O' rings and seals.

Cleaning

Requirements:

(1) Container to immerse components.

(2) Good quality clean paraffin.

Soak the components in the container containing the paraffin. Ensure full immersion, agitate components to ensure that air passages are flushed through. Remove components from the container, thoroughly dry and blow through air passages to remove moisture. Place components in an air tight container until required for assembly. Dispose of the dirty paraffin in accordance with health and safety regulations.

MAINTENANCE

It is recommended that the tool is serviced at 1000hrs running time.

WARNING

THE BEARING SLEEVE COMPLETE IS UNDER SPRING (20) COMPRESSION. WHILST RESISTING THE THRUST DUE TO THE SPRING (20), CAREFULLY UNSCREW AND REMOVE THE BEARING SLEEVE COMPLETE FOLLOWED BY THE SPRING.

Dismantle the tool using the exploded view. Clean all components and inspect for wear or damage, exchange if necessary. Apply new lubricant to the relevant parts in accordance with list. Assemble the tool using the exploded view.

Torque values given are ±5%.

Special tools shown in exploded view are in addition to normal workshop tools.

NOTE: Protective gloves and eye protection should be worn during cleaning of parts. Eating or smoking is prohibited when cleaning, dismantling or assembling tool.

Worn components should be carefully handled and disposed of safely.

Electric Motor

Electric motor testing and checking as necessary should be carried out by a competent electrician with the relevant section of the Health and Safety Act.

Use only authorized parts. Any damage or malfunction caused by the use of unauthorized parts is not covered by Warranty or Product Liability.

Desoutter™

Desoutter Limited. London NW9 6ND

2. Position for SW2 proximity switch, detects a signal when the tool has reached depth.

3. Retract Air port, tapped 1/8 in. BSP.

4. Advance Air port, tapped 1/8 in. BSP

NOTE: When using simple control block replace screw (38) with extended head screw (383983).

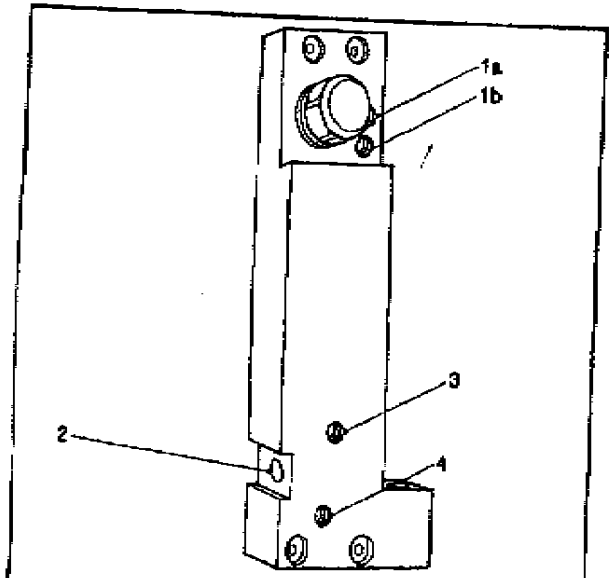

FIGURE 4 VALVE BLOCK MODULE

Accessories

Mounting Clamps - A range of clamps bases and columns are available. Full details obtained from Desoutter.

Hydraulic Check Unit (HCU) - The tool will function satisfactorily, when drilling a blind hole at the set feed rate. Should it be required to break through the material and possibly through into another hole, feed acceleration will occur with possible drill breakage. To obviate this, the fitment of an HCU is strongly recommended. Request information from Desoutter.

Peck Feed Drills - The Desoutter Peck Feed Drill System should be used when the depth of the hole to be drilled is five or more times the hole diameter. This helps clear drill chips and avoids excessive overheating of drill bit. Hole size accuracy can be improved and drill bit run-out can be kept to the minimum. Request information from Desoutter.

Dust Extraction Kits

Extension tube	Nominal Stroke Length	Locking Screw Length	Kit Part No.
251013	45 mm	140 mm	52172
251003	75 mm	200 mm	52182
250993	105 mm	200 mm	52182

The extraction kit must be used in conjunction with an extension tube. The sleeve outlet fits over the tube chuck key insertion slot, and is locked by two screws. Dust Extraction Kits must be used with an external vacuum collection system.

SETTING DRILLING OPERATION (See Figure 5)

The drill must be at least 6mm (0.25in) above the work piece.

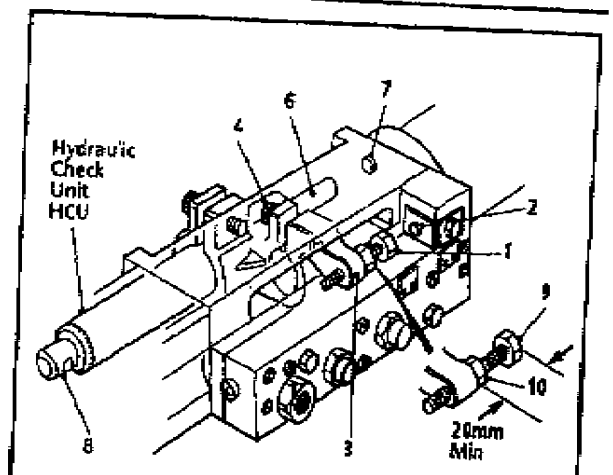

FIGURE 5 HYDRAULIC CHECK UNIT (HCU)

NOTE: This setting details a unit with a HCU, reference to the HCU should be ignored when setting the standard tool.

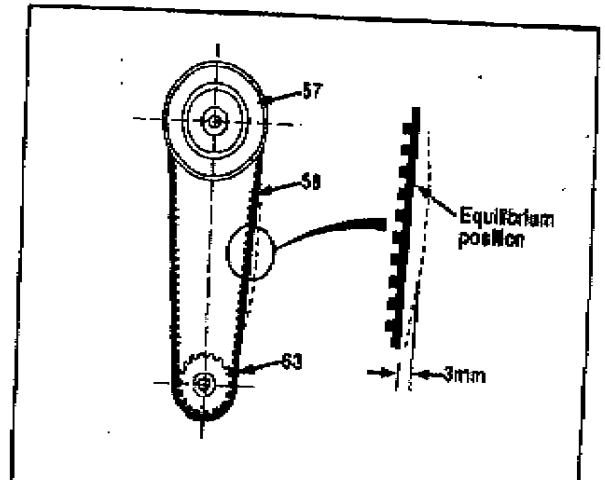

FIGURE 6 ADJUSTING THE TIMING BELT

Set the gap between the (1) and (2) to equal the depth of drilling required PLUS the distance the bit is above the work piece, by sliding (3). Lock in position with (4) to the recommended torque.

Position the HCU in (3). Set the gap between (6) and (7) to a distance as required above the work piece.

Printed in England

Part No. 382723 Issue 1 7.95

Desoutter™

Desoutter Limited. London NW9 6ND

(4) ENSURE THAT THE WORK PIECE IS SECURELY CLAMPED BEFORE COMMENCEMENT OF OPERATION.

(5) CLEAR ALL LOOSE ITEMS FROM THE VICINITY.

(6) ENSURE THAT THE TOOL IS SECURELY CLAMPED AROUND THE OUTER CASE BEFORE COMMENCEMENT OF OPERATION.

(7) ENSURE THAT SAFETY GUARDS ARE FITTED.

(8) BEWARE OF TOOL OUTPUT. THIS ADVANCES AND ROTATES.

(9) EYE AND EAR PROTECTION MUST BE WORN WHEN OPERATING THE TOOL.

(10) DO NOT OPERATE THE TOOL IN EXPLOSIVE ATMOSPHERES.

(11) WHEN MACHINING HAZARDOUS MATERIALS, PROVISION MUST BE MADE FOR DUST COLLECTION OR SUPPRESSION.

(12) ⚠ ENSURE THAT AN EMERGENCY STOP IS PROVIDED FOR THE TOOL, WHETHER USED ALONE OR BUILT INTO A MACHINE. A SUITABLE EMERGENCY STOP CIRCUIT IS DETAILED IN FIGURE 2.

(13) ON ADVANCE THE TOOL IS UNDER SPRING COMPRESSION, THEREFORE UPON AIR SHUTOFF IT WILL RETURN TO DATUM.

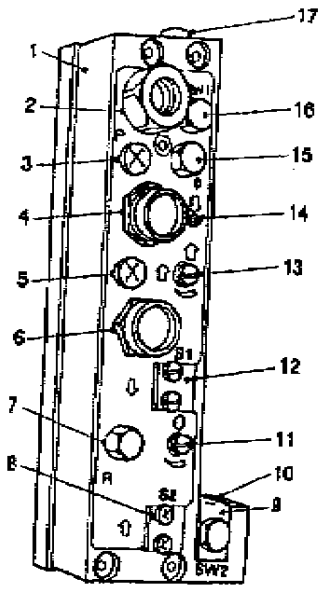

FIGURE 3 VALVE BLOCK MODULE COMPLETE

CONTROL VALVE (FIGURE 3)

The valve block module complete (1) contains all the control functions and signal originations for external control.

The controls and locations are identified below and detailed in the Drilling operation.

LOCATION:

2 Main Air Inlet port, tapped ¼in BSP or NPT.

3 'P' Input port, tapped M5. Signal point for peck feed or Dwell control kit circuit.

4 Manual Retract Button (Red).

5 'I' Remote Start Input port, tapped M5. Receives external signal to start the tool cycle.

6 Manual Start Button (Green).

7 'R' Retract Output port, tapped 1/8in BSP. supply for air return.

†8 Position for 'S2' Solenoid Valve for Elect Emergency Retract.

†9 Position for 'SW2' Proximity Switch, detects signal at the end of a cycle for interface connection (i.e. it is High at depth.

10 Stroke Control Valve.

11 Feed Rate Regulating Screw.

†12 Position for 'S1' Solenoid Valve for Electri Start.

13 Retract Rate Regulating Screw.

14 Advance rate regulating Screw.

15 'O' port, tapped 1/8in BSP receives signal to return the feed to start position for peck feed or Dwell control.

†16 Position for 'SW1' Proximity Switch, detects a signal at the beginning of a cycle for interface kit connection. (i.e. is High in datum position

17 'M' port, is tapped M5. Used for sequence control. The signal is produced when the tool is at rest.

NOTE: The 'M' port is intended for the operation of pilot valves. It must not be used as a source of air supply for other uses.

† Available in KIT form. See Desoutter Catalogue for details.

Simple Control Block (108862) (Figure 4)

This control valve block module is used when the tool is to be controlled remotely. Figure 4 details the signal originations.

NOTE: External circuitry will be required to control the speed of advance and retract feeds.

LOCATION

1a. Position for SW1 proximity switch, using actuating pin.

1b Position for SW1 proximity switch, using sleeve on extension tube.

Both 1a and 1b detects a signal when the tool is at the datum position.

GB

Desoutter Limited. London NW9 6ND

OPERATORS INSTRUCTIONS

Air Supply - Main

A water free and filtered air supply is required, at a pressure of 6.3 bar (91.4 Psig), with a flow rate of 9.9l/s (21cu.ft/min) controlled by a pressure regulator selected from the Desoutter Air Line Service Equipment Catalogue.

Air Supply - Remote

The basic requirements are as above but the pressure must be at least 2.7bar (40 Psig) and the flow requirement when signalling is 0.47 l/s (1cuft/min). The signal duration should be kept to the minimum to reduce air consumption.

Lubrication

Correct lubrication is vital for maximum performance of the tool and an airline lubricator selected from the Desoutter Air Line Service Equipment Catalogue should be fitted into the system down stream of the filter.

Desoutter recommend the use of an ISO Viscosity Classified oil, grade number ISO VG 15, in the lubricator.

The tool can be operated on dry line.

Electricity Supply

The motor must be connected to a three phase supply in accordance with the VOLTAGE CHART and provided with a starter fitted with an overload protection.

Voltage Chart - 3 Phase (AFDE62) (AFDE62C)

Recommended Starter Crabtree BD 15	Voltage V	Frequency Hz	Motor Connections Link	Overload Setting
20101/HB	220 to 240	50	Delta	3.1 to 3.5 Amps
20101/HB	220 to 264	60	Delta	3.3 to 3.8 Amps
20101/FJ	360 to 440	60	Star	1.9 to 2.4 Amps
20101/FH	380 to 520	50	Star	1.9 to 2.4 Amps

Connecting to the Electrical Supply

WARNING: (1) ENSURE THE SUPPLY IS OFF BEFORE MAKING CONNECTIONS.

(2) STAR AND DELTA CONNECTIONS ARE TO BE STRICTLY IN ACCORDANCE WITH THE SUPPLY VOLTAGE GIVEN IN THE CHART. ANY DEVIATION FROM THE CHART WILL RESULT IN DAMAGE TO THE MOTOR.

Determine the supply voltage and refer to the voltage chart for motor connections details.

For Y (star) connection, couple terminal W2 to U2 and U2 to V2.

For Δ (Delta) connection, couple terminal W2 to U1, U2 to V1 and V2 to W1.

In both methods the motor will be direct on line connected.

NOTE: The terminals are fitted with 4mm pozidrive screws and the connecting links are connected between the screws. The earth connection is a 4mm pozidrive screw for which a suitable screwdriver will be required.

IMPORTANT: Do not remove or loosen the bottom nut on the terminals.

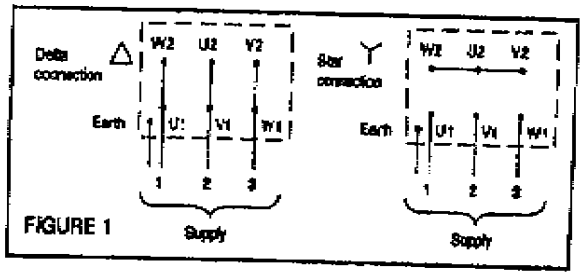

FIGURE 1

For all voltages: The supply cable (min. cable rating: armoured flexible 1.0mm conductors) is connected to the motor terminals U1, V1, W1 and earth, which are in the terminal box (see Figure 1). A suitable cable clamp should be fitted; the terminal box is provided with four (19mm diameter) "KNOCK-OUTS".

The Electric Motor

The motor is a totally enclosed, fan-cooled three-phase squirrel cage, class B minimum insulation with working ambient temperature of 40°C. Looking at the fan end of the motor the rotation should be anti-clockwise. If the rotation is opposite, interchange connections U1 and V1 to correct the rotation.

DATA

Maximum air pressure Pmax = 6bar
Minimum air pressure Pmin = 6bar
Sound pressure level = <70 dBA CAGI-PNEUROP Test Code
Weight = 17 kg

Statement of Use

The tool is designed for drilling holes, but may be adapted for other specified purposes, using Desoutter approved accessories.

NOTE: Provision must be made for an Emergency Stop if the tool is used alone or built into a machine. A suitable circuit diagram for manufacturing an Emergency Stop is provided in Figure 2.

WARNING: (1) ALWAYS DISCONNECT THE TOOL FROM THE AIR SUPPLY BEFORE ATTEMPTING ANY REPLACEMENT, ADJUSTING, SERVICING OR DISMANTLING.

(2) ENSURE THAT NO LOOSE ARTICLES OF CLOTHING, LOOSE HAIR, OR CLEANING MATERIAL CAN BE CAUGHT BY THE MOVING PARTS OF THE TOOL.

(3) ALWAYS ALLOW THE TOOL TO STOP BEFORE REMOVING THE WORK.