AirToolPro.com by Zampini Industrial Group - Premier Tool Suppliers Since 1987 1-800-353-4676

CP-351 CRIMPER

UTICA PNEUMATIC 191

FIFTH EDITION

APRIL, 1978

Supersedes Fourth Edition June, 1974

Lou Zampini & Associates
2 Douglas Pike, Rt. 7
Smithfield, RI 02917
1 800 353 4676
FAX 1 401 679 0165

Instruction and Parts Book for

PNEUMATIC CRIMPER

CP-351-CABH
Models "B"*,"BA"*,"C"*&"D"*

**SPARE PARTS ONLY*

Chicago Pneumatic

Chicago Pneumatic Tool Company • 2200 Bleecker Street • Utica NY 13501 • 315-792-2600 • FAX 315-792-2651

P-1223E

AirToolPro.com by Zampini Industrial Group - Premier Tool Suppliers Since 1987 1-800-353-4676

GENERAL INSTRUCTIONS

Air Supply

For satisfactory performance, 90 psi of clean, dry air is required AT THE TOOL with tool operating. Whip hose 5/16" I.D. may be used at the air inlet, but longer runs should be 3/8" hose size or larger used with couplings of a minimum 9/32" I.D. The use of a C-132193 CHICAGO PNEUMATIC Air Line Separator and Filter and a C-104091 CHICAGO PNEUMATIC Air Line Pressure Regulator mounted as closely as possible to the tool is recommended.

Preparing for Operation

Daily before using and before putting tool into operation, disconnect air hose and pour about one teaspoonful of recommended oil into air inlet. Blow out air line to clear it of accumulated dirt and moisture, connect tool and operate to allow oil to be carried to interior.

Lubrication

Daily before using and after each eight hours service, pour about one teaspoonful of recommended oil into air inlet. In addition, the use of a C-132198 CHICAGO PNEUMATIC Air Line Lubricator installed at the end of each air pipe leading to this pneumatic tool is recommended to assure a constant and adequate supply of lubricant to valves and cylinder.

Recommended Lubricants

CHICAGO PNEUMATIC Airoilene Oil, which contains moisture absorbent, rust inhibiting additives and will not separate while the tool is idle, is recommended for use with this pneumatic tool and may be purchased under the following symbols:

1 gal. can -------- P-089507
5 gal. can -------- P-089508

At each disassembly, coat yoke and wedge mechanism with a good grade grease such as Texaco Novatex #1 or equivalent.

At each disassembly, coat roller bearings with a good grade grease such as New York and New Jersey Lubricant Co's. #S59 grease or equivalent.

Adjustment

Adjustment of the pressure control valve regulates the amount of pressure exerted on the dies.

To increase pressure, turn adjusting screw (58) in a clockwise direction.

To decrease pressure, turn adjusting screw in a counter clockwise direction.

The Crimper may be adjusted for thickness of material being crimped by varying the number of hammer spacers (28) used between set holder (33) and hammer (27).

To adjust Crimper, first tighten pressure adjusting screw (58) to stop automatic cycling of tool. Activate tool and measure the shut height, no load, between hammer and yoke face.

To assure full crimping force, install or deduct hammer spacers (28) between set holder (33) and hammer (27) until distance between faces of hammer and yoke is approximately 1/32" less than total work thickness (after crimp).

To remove hammer, first remove spring guard (45) and return springs (37). Remove set holder lever shaft (38) and lever (39). Loosen set screw (29) and pull back set holder (33) to clear hammer (27). Install or remove spacers as required and reassemble tool. CAUTION: Do not lose small brass plug (31).

CYCLE OF OPERATION

When the air is turned on it flows through ports 2 and 3 into throttle valve chamber "A" and through port 4 into piston return chamber "B" returning piston to starting position. As piston returns to its starting position port 9 is exposed to return air and allows air to flow through ports 10 and 7 into top chamber of automatic distributor valve forcing valve down into its starting position.

When the throttle lever is depressed, the throttle valve is forced down, breaking the seal made by the "O" ring and permitting air to flow from chamber "A" through port 6 into chamber "C". From chamber "C" the air flows through port 1 into the power cylinder, forcing piston "E" forward in its power stroke.

As the air pressure builds up in the power cylinder (predetermined by the tension on the pressure adjusting spring) the air forces the pressure control valve back allowing the air to flow through port 8 into the bottom chamber of the automatic distributor valve.

In the meantime port 9 having been opened to atmosphere by the forward stroke of the piston, allows the air pressure to drop at the top of the automatic distributor valve by air bleeding through ports 7, 9, 10 and 11 to atmosphere.

When the air flows through port 8 into the bottom chamber of the automatic distributor valve, the air pressure builds up forcing the automatic distributor valve up closing the power cylinder ports and opening the exhaust ports allowing the air in the power cylinder to exhaust to the atmosphere. The air pressure in the power cylinder is then reduced so the air flowing through port 4 into chamber "B" forces the return of the piston.

As the air pressure in the power cylinder decreases, the air pressure on the pressure control valve also drops allowing the pressure control valve to close, cutting off the air pressure on the bottom chamber of the automatic distributor valve. Air in pressure control valve, after pressure control valve closes, bleeds by O.D. of valve out thru port 12 to atmosphere. Port 9 being closed to atmosphere by the return stroke of the piston permits air to flow through ports 7 and 10

AirToolPro.com by Zampini Industrial Group - Premier Tool Suppliers Since 1987 1-800-353-4676

CP-351-CABH CRIMPER Models "B"*, "BA"* & "C"*▲

MODEL "B" (7/16" DEEP CRIMP)
MODEL "BA" (9/16" DEEP CRIMP)
MODEL "C" (9/16" DEEP CRIMP)

* SPARE PARTS ONLY

All Threads Are Right Hand Unless Otherwise Specified.

▲ Changed Since Last Edition

Conversion Kit P-126157
(Converts Mod. "BA" to Mod. "C")
Incl: Index No's. 80, 81, 95, 96, 98, 99, 100 & 101.

Conversion Kit P-128874
(Converts Mod. "C" to Mod. "D")
Incl: Index No's. 7, 8, 15, 48 & 90.

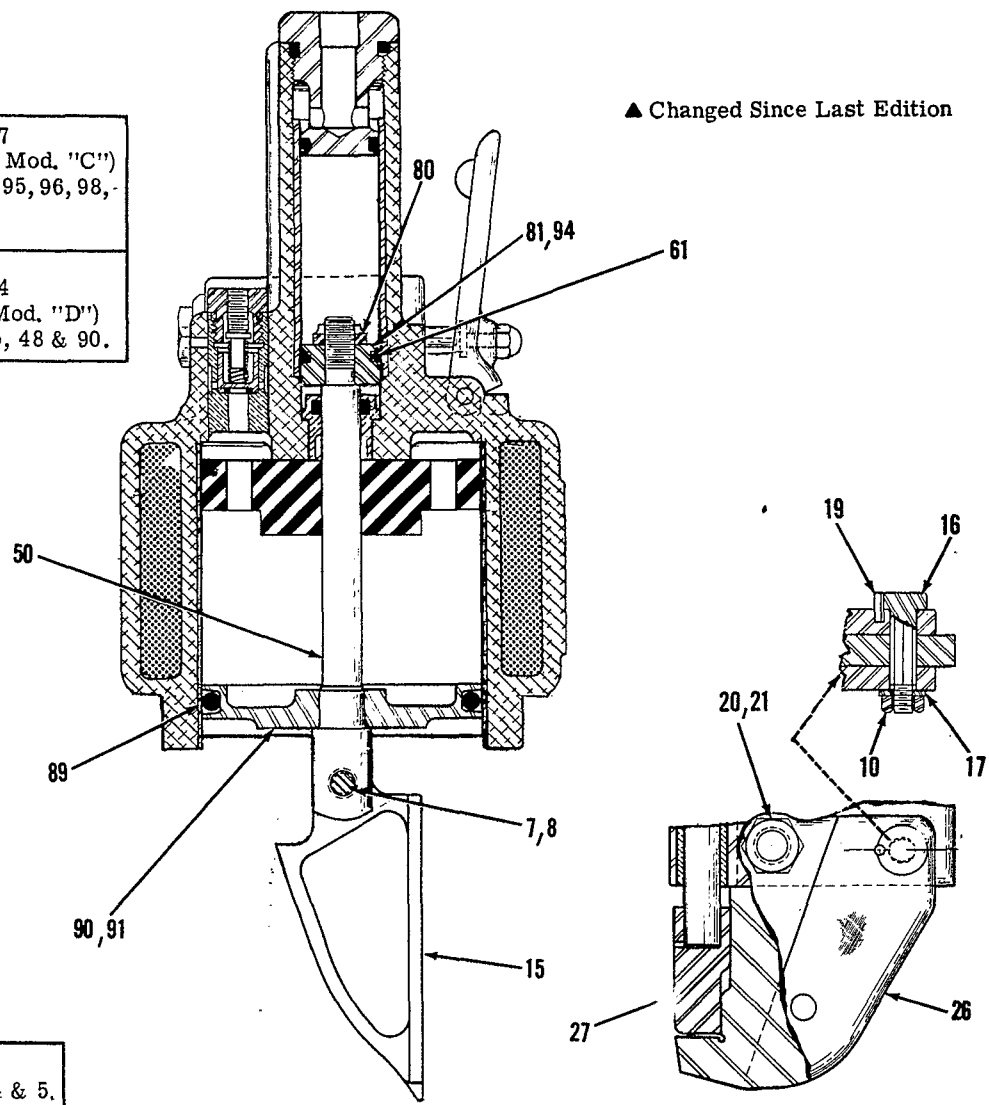

All Other Parts Same As On Model "D" On Pages 4 & 5. Less Index No. 48.

Index No.	CP Part No.	Description	No. Req'd
7	P-073116	Pin-Piston Rod	1
8	P-074672	Ring-Retaining	2
10	P-006087	Nut-Hex (1/4"-28)	5
15	P-073006	Wedge	1
16	P-042556	Bolt-Yoke (Special)	1
17	S-016067	Washer-Yoke Bolt	1
19	C-089721	Pin-Roll (1/8" x 3/8")	1
20	P-093812	Bolt-Yoke (Special)	1
21	P-006315	Nut-Check (7/16"-20)	1
26	P-059557	Yoke (Model "BA" & "C")	1
	P-092603	Yoke (Model "B")	
		(All Yokes Incl: Index No's. 16, 17, 19, 20, 21 & 1 of 10)	
27	P-059556	Hammer (Model "BA" & "C")	1

Index No.	CP Part No.	Description	No. Req'd
27	P-098685	Hammer (Model "B")	1
50	P-092600	Rod-Piston	1
61	C-083177	"O" Ring (-210)	2
80	P-070438	Locknut (3/8"-24) (Model "B" & "BA")	1
	S-086843	Locknut (3/8"-24) Model "C"	
81	P-089740	Piston-Return (Mod. "B"&"BA")	1
	P-123984	Piston-Return (Model "C")	
89	P-089292	"O" Ring (-338)	1
90	P-089737	Piston	1
91	P-073019	Piston & "O" Ring Ass'y (Incl: Index No's. 89 & 90)	1
94	P-073022	Piston-Return (Incl: Index No's. 81 & 1 of 61)	1

When ordering spare parts, give Name, Speed or Size, Model and Serial Number of the tool and Part Number and Description of each part desired.

AirToolPro.com by Zampini Industrial Group - Premier Tool Suppliers Since 1987 1-800-353-4676

CP-351- CABH CRIMPER Model "D"

(9/16" DEEP CRIMP)

Index No.	CP Part No.	Description	No. Req'd
1	P-092490	Race-Outer	1
2	P-073002	Adapter-Cylinder	1
3	P-073030	Roller-Yoke Frame	2
4	P-073031	Bearing-Roller	38
5	P-073032	Washer-Thrust	4
▲7	P-114035	Pin	1
▲8	P-128840	Pin-Spirol	1
9	P-073026	Bolt-Yoke Frame	3
10	P-006087	Nut-Hex. (1/4"-28)	5
11	P-073029	Spacer-Yoke Frame	1
13	P-073027	Washer (3/16" Flat)	4
14	P-073033	Guard-Roller	1
▲15	P-114036	Wedge	1
16	P-042556	Bolt-Yoke (Special)	1
17	S-016067	Washer-Yoke Bolt	1
▲18	P-102451	Bail-Ass'y(Incl: Index #1, 22, 23, 25, 92 & 93)	1
19	C-089721	Pin-Roll (1/8" x 3/8")	1
20	P-093812	Bolt-Yoke (Special)	1
21	P-006315	Nut-Check (7/16"-20)	1
22	P-092491	Cable-Bail	1
23	P-092488	Screw-Cable Bail	2
25	P-006601	Lockwasher (3/8")	2
26	P-059557	Yoke (Incl: Index No. 16, 17, 19, 20, 21 & 1 of 10)	1
27	P-059556	Hammer	1
28	P-098947	Spacer-Hammer (.070")	1
	P-102286	Spacer-Hammer (.025")	3
29	S-038995	Screw-Headless Set (1/4"-28 x 1/4")	1
31	P-004895	Plug	1
32	P-073036	Bushing-Set Holder	1
33	P-092602	Holder-Set	1
34	P-073961	Yoke-Spring	1
35	P-073242	Pin-Lock	1
37	P-073238	Spring-Return	2
38	P-073239	Shaft-Lever	1
39	P-073005	Lever-Holder	1
40	S-067191	Bearing-Roller	28
41	P-073043	Roller-Lever	1
43	P-073045	Shaft-Roller	1
44	P-073041	Screw-Round Head (#10-32 x 1/4")	2
45	P-073240	Guard-Spring	1
46	P-073004	Frame-Yoke (Incl: #32)	1
47	P-073025	Screw-Allen Cap (1 4"-20 x 5/8")	4
▲48	P-128841	Bumper-Piston (Front)	1
51	P-092587	Bushing-Adjusting Valve	1
52	C-079489	"O" Ring (-008)	1
53	P-092588	Valve-Pressure Adjusting	1

Index No.	CP Part No.	Description	No. Req'd
55	P-092589	Spring-Pressure Adjusting	1
56	P-092590	Guide-Spring	1
57	P-092591	Cap-Screw	1
58	P-126213	Screw-Headless Set (Cup Point) (1/4"-28 x 5/8")	1
59	P-126241	Washer-Lock (9/16")	2
61	C-083177	"O" Ring (-210)	2
62	P-092593	Bushing-Air Inlet	1
63	P-092599	Cap-Automatic Valve	2
64	P-092595	Cap-"O" Ring	1
65	P-083082	"O" Ring (-112)	4
67	P-093384	Spring-Throttle Valve	1
68	C-069083	"O" Ring (-010)	1
69	P-092596	Cap-Throttle Valve	1
70	P-092585	Bushing-Throttle Valve	1
71	P-092594	Valve-Throttle	1
73	P-093671	Ring-Truarc Retaining (#5100-106) (External)	2
74	P-092598	Bumper-Automatic Va'	2
75	P-092586	Bushing-Automatic Valve	1
76	A-082777	"O" Ring (-012)	2
77	P-092597	Valve-Automatic	1
78	C-084172	"O" Ring (-214)	1
79	P-073052	Lever-Throttle	1
80	S-086843	Locknut (3/8"-24)	1
81	P-123984	Piston-Return	1
82	P-073115	Screw-Adjusting	1
83	H-072480	Nut-Acorn (#10-32)	1
85	P-073085	Pin-Throttle Lever	1
86	P-057199	Bushing-Piston Rod (Incl: 1 of 65)	1
87	P-123792	Cylinder (Incl: #51, 70, 73, 75 & 86)	1
88	P-092601	Bumper-Piston (Rear)	1
89	P-089292	"O" Ring (-338)	1
▲90	P-128872	Piston	1
92	P-092489	Race-Inner	1
93	P-070416	Ball-Steel (5/16" Dia.)	52
94	P-073022	Piston-Return (Incl: #81 & 1 of 61)	1
95	CA-058180	Screw-Self Tapping (#8-32)	4
96	P-126159	Cylinder Assembly (Incl: #7,8, 15,50,52-58, 1 of 61,62-69, 71, 74, 76-85,87,88,91,95,& 98-101)	1
97	P-092607	Yoke Frame Ass'y (Incl: #2-5, 9,4 of 10,11,13,14, & 33-47)	1
98	P-126136	Cover-Exhaust	1
99	P-126137	Screen-Exhaust	1
100	P-126138	Filler-Exh. Chamber	1
101	P-126199	Filler-Exh. Outlet	1

▲ Changed Since Last Edition

AirToolPro.com by Zampini Industrial Group - Premier Tool Suppliers Since 1987 1-800-353-4676

CP-351-CABH CRIMPER Model "D"

(9/16" DEEP CRIMP)

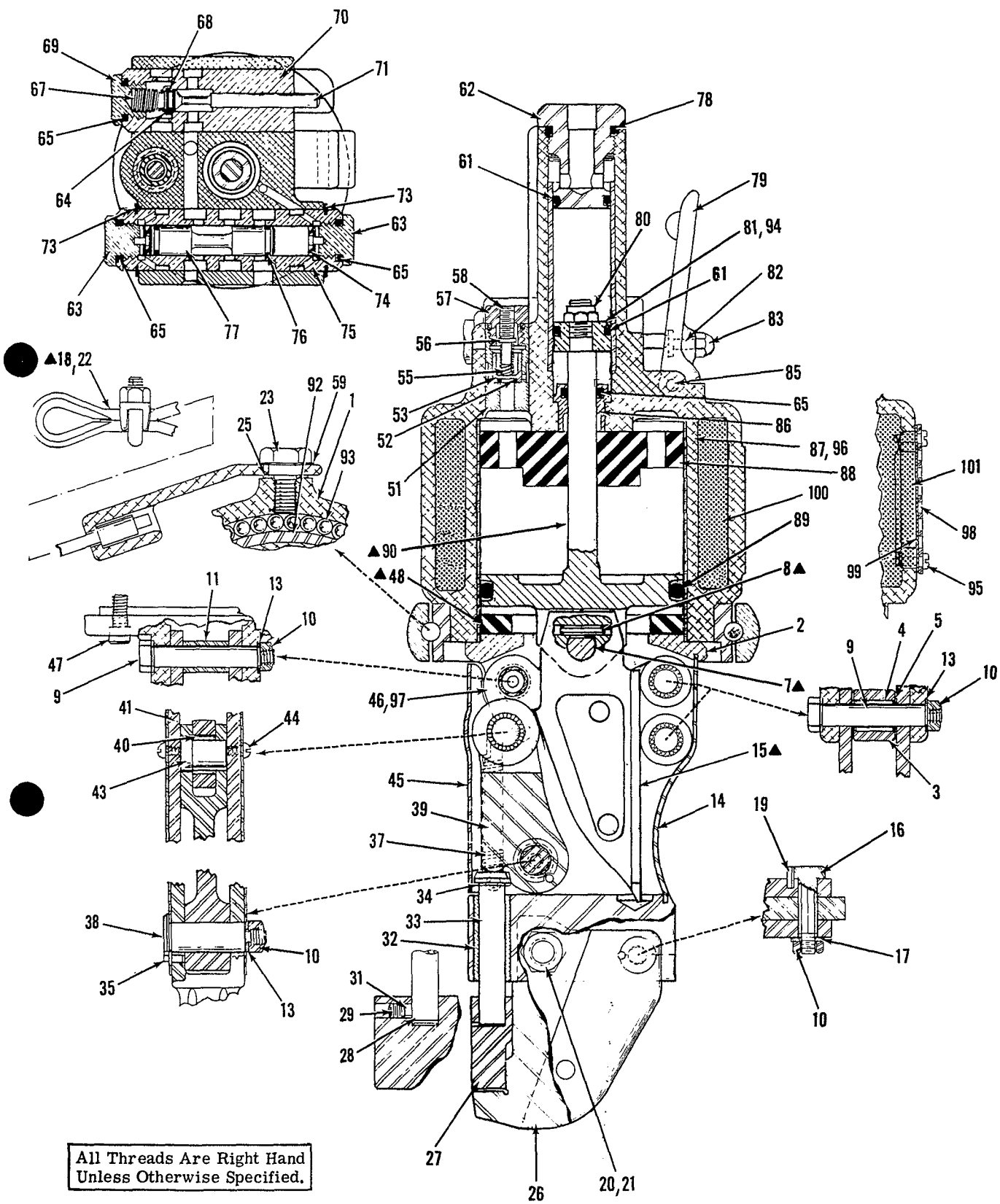

All Threads Are Right Hand Unless Otherwise Specified.

▲ Changed Since Last Edition

When ordering spare parts, give Name, Speed or Size, Model and Serial Number of the tool and Part Number and Description of each part desired.

AirToolPro.com by Zampini Industrial Group - Premier Tool Suppliers Since 1987 1-800-353-4676

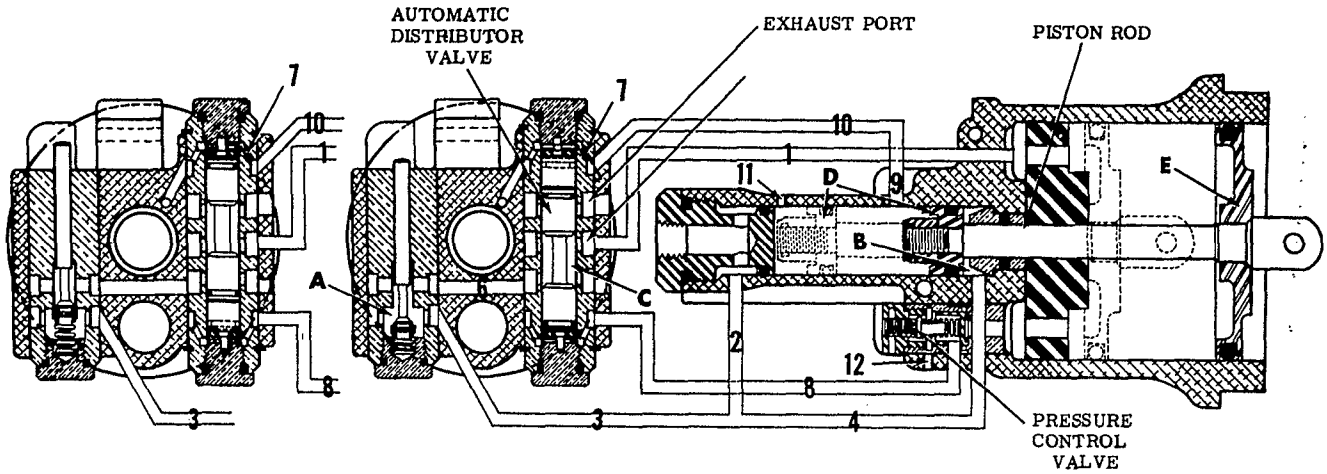

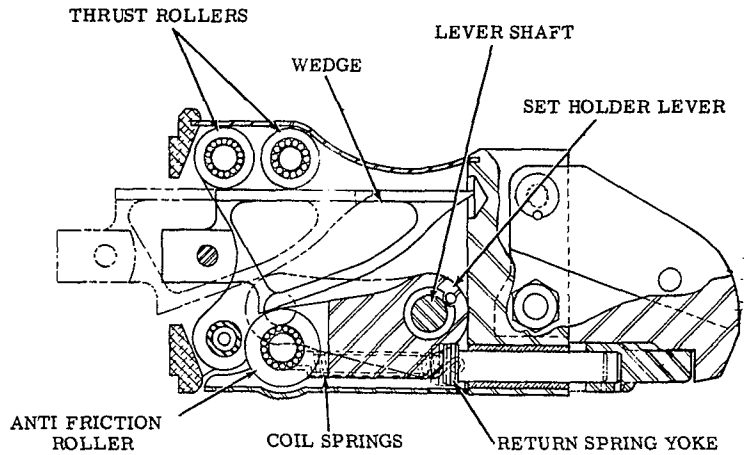

to the top of the automatic distributor valve, forcing it down.

The above cycle is then repeated.

Compressed air actuates work piston "E" housed in large cylinder of the power unit and which is connected to return piston "D" in the small cylinder. The return piston draws the work piston back to its starting position in the last part of the work cycle.

Mounted on the outer end of the piston rod is a wedge, the upper edge of which is always in contact with the thrust rollers. The lower face of the wedge is formed with a double inclined surface which controls the action of the set holder lever.

The anti-friction roller mounted on the free end of the set holder lever is held in close contact with the angular lower face of the wedge cam by the indirect action of two coil springs. The coil springs are attached to the frame at one end and to the set holder at the other end.

The set holder is designed with two diameters and the coil springs are attached to the ends of the flat yoke which fits over the set holder and rests against the shoulder.

The set holder lever is fulcrumed at the set holder lever shaft and carries on its lower face a cam shoulder which engages the end of the set holder.

As the piston returns to its starting position the wedge cam is withdrawn allowing the free end of the set holder lever to swing upward as a result of the tension of the coil springs.

The cycling speed of the unit is dependent on the differential between the line pressure and the maximum working pressure of the unit which is controlled by the pressure control valve setting. See "Adjustment." The greater this differential, the faster the cycling speed.

EXAMPLE: If the line pressure is 90 psi and the maximum working pressure is set for 80 psi (about 6000 pounds working force), the unit will operate at approximately 180 cycles per minute.

If the line pressure is 100 psi and the maximum working pressure is set at 80 psi, the unit will operate at approximately 225 cycles per minute.

AirToolPro.com by Zampini Industrial Group - Premier Tool Suppliers Since 1987 1-800-353-4676

SPARE PARTS SERVICE CHART

THIS SERVICE CHART IS PUBLISHED AS A GUIDE TO EXPECTANT LIFE OF COMPONENT PARTS. THE REPLACEMENT LEVELS ARE BASED ON AVERAGE TOOL USAGE OVER A ONE YEAR PERIOD

EXAMPLE: For 10 tools in use: 10 high wear items will be required per year, 7 medium wear items, etc.
NOTE: Quantities must be increased where tool is subjected to more severe and/or continuous usage.

LEGEND

X—Type of wear, if no other comments apply.

R—Require replacement at recommended intervals.

R1—Replace each time tool is disassembled.

*See Part List

Index No.	CP Part No.	Description	No. Req'd	100% High Wear	70% Medium Wear	30% Low Wear	10% Non Wear	Subject To External Damage
1	P-092490	Race-Outer	1					X
2	P-073002	Adapter-Cylinder	1					X
3	P-073030	Roller-Yoke Frame	2	X				
4	P-073031	Bearing-Roller	38	X				
5	P-073032	Washer-Thrust	4		X			
7	*	Pin-Piston Rod	1	X				
8	*	Pin-Spirol	2		X			
9	P-073026	Bolt-Yoke Frame	3	X				
11	P-073029	Spacer-Yoke Frame	1			X		
14	P-073033	Guard-Roller	1					X
15	*	Wedge	1	X				
16	P-042556	Bolt-Yoke	1		X			
20	P-093812	Bolt-Yoke	1		X			
22	P-092491	Cable-Bail	1					X
23	P-092488	Screw-Cable & Bail	2					X
26	*	Yoke	1	X				
27	*	Hammer	1	X				
28	*	Spacer-Hammer	1	X				
29	S-038995	Screw-Headless Set	1		X			
31	P-004895	Plug	1		X			
32	P-073036	Bushing-Set Holder	1	X				
33	P-092602	Holder-Set	1	X				
34	P-073961	Yoke-Spring	1		X			
37	P-073238	Spring-Return	2	X				
38	P-073239	Shaft-Lever	1	X				
39	P-073005	Lever-Holder	1	X				
40	S-067191	Bearing-Roller	28	X				
41	P-073043	Roller-Lever	1	X				
43	P-073045	Shaft-Roller	1	X				
45	P-073240	Guard-Spring	1					X
46	P-073004	Frame-Yoke	1	X				
48	P-128841	Bumper-Piston (Front)	1		X			
51	P-092587	Bushing-Adjusting Valve	1	X				
52	C-079489	"O" Ring	1	R1				
53	P-092588	Valve-Pressure Adjusting	1	X				
55	P-092589	Spring-Pressure Adjusting	1	X				
56	P-092590	Guide-Spring	1		X			
61	C-083177	"O" Ring	2		R1			
65	P-083082	"O" Ring	4			R1		
67	P-093384	Spring-Throttle Valve	1		X			
68	C-069083	"O" Ring	1		R1			
70	P-092585	Bushing-Throttle Valve	1			X		
71	P-092594	Valve-Throttle	1		X			
74	P-092598	Bumper-Automatic Valve	2		X			
75	P-092586	Bushing-Automatic Valve	1		X			
76	A-082777	"O" Ring	2		R1			
77	P-092597	Valve-Automatic	1		X			
78	C-084172	"O" Ring	1		R1			
79	P-073052	Lever-Throttle	1					X
81	*	Piston-Return	1		X			
85	P-073085	Pin-Throttle Lever	1		X			
86	P-057199	Bushing-Piston Rod	1		X			
87	P-123792	Cylinder	1					X
88	P-092601	Bumper-Piston (Rear)	1		X			
89	P-089292	"O" Ring	1	R1				
90	*	Piston	1			X		
92	P-092489	Race-Inner	1			X		
94	P-073022	Piston-Return	1		X			
100	P-126138	Filler-Exh. Chamber	1				X	
101	P-126199	Filler-Exh. Outlet	1				X	

When ordering spare parts, give Name, Speed or Size, Model and Serial Number of the tool and Part Number and Description of each part desired.