AirToolPro.com by Zampini Industrial Group - Premier Tool Suppliers Since 1987 1-800-353-4676

Chicago Pneumatic
1800 Overview Drive • Rock Hill SC • 29730 USA

CP733 Series
Impact Wrench

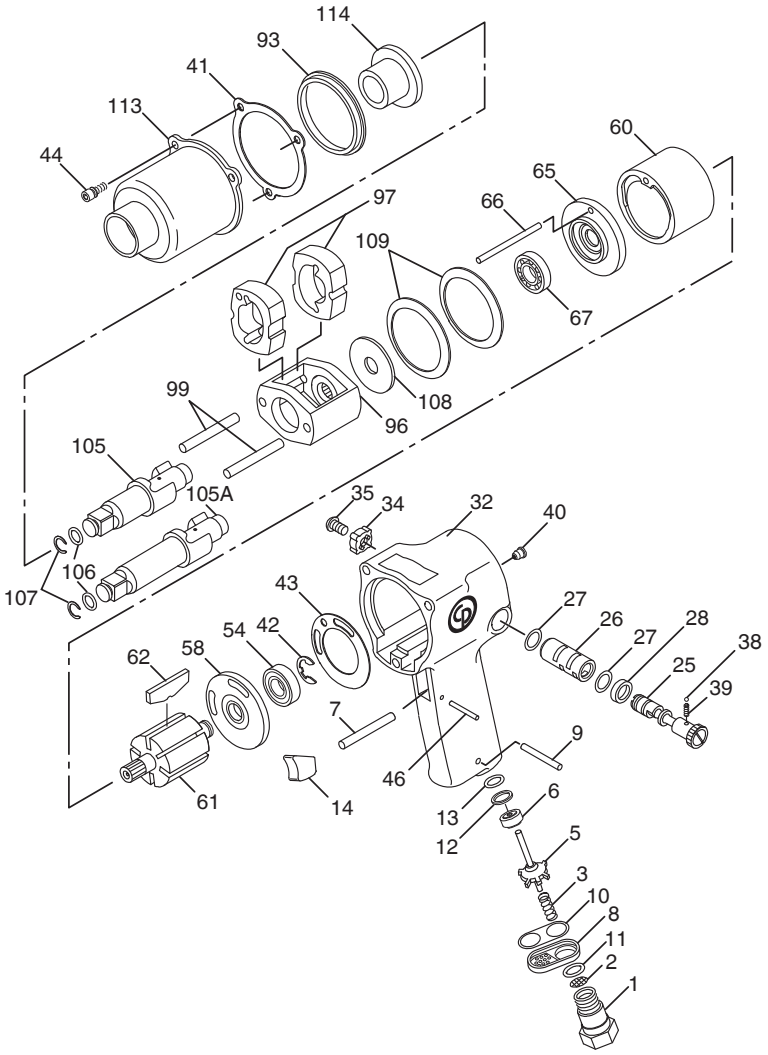

Index No.	Part No.	Description	No. Req'd.
1	CA147022	Bushing-Air Inlet	1
2	CA059037	Strainer-Air	1
3	CA142464	Spring-Throttle	1
5	CA142460	Valve-Throttle	1
6	C139037	Seat-Throttle	1
7	CA144831	Pin-Throttle	1
8	CA147023	Deflector-Exhaust	1
9	R086991	Pin-Roll .188 x 1.00	1
10	CA148528	Gasket-Deflector Exhaust	1
11	C105693	O-Ring-017	1
12	CA149096	O-Ring	1
13	CA149095	Spacer	1
14	CA147017	Trigger	1
25	CA145485	Valve-Reverse	1
26	CA145483	Bushing-Reverse Valve	1
27	A043001	O-Ring-013	2
28	CA149668	Bushing-Detent	1
32	CA157172	Housing-Motor Assembly (Incl: 25, 26, 27, 28, 34, 35, 38, 39)	1
34	CA145488	Knob-Reverse Valve	1
35	CA145489	Screw-Cap	1
38	CA145486	Ball-Reverse Valve Detent	1
39	CA145487	Spring-Valve Detent	1
40	CA145490	Assembly-Grease Fitting	1
41	CA147054	Gasket-Motor Housing	1
42	CA145494	Retainer-Bearing	1
43	CA145501	Gasket-End Plate	1
44	CA145508	Socket HD Screw w/lockwasher	3
46	CA144836	Pin-Roll 3/32"	1
54	S065618	Bearing-Ball	1
58	CA145500	Plate-Rear End	1
60	CA145495	Liner	1
61	CA145491	Rotor	1
62	CA145498	Set-Rotor Blade (6)	1

Index No.	Part No.	Description	No. Req'd.
65	CA145499	Plate-Front End	1
66	CA145496	Dowel-Liner	1
67	C066342	Bearing-Ball	1
93	CA145505	Pilot-Hammer Cage	1
96	CA157536	Cage-Hammer (Model A Discontinued)	1
	CA155124	Cage-Hammer (Model B)	1
97	CA155055	Dog-Clutch	2
99	CA145470	Pin-Cage (Model A Only)	2
	CA155734	Pin-Cage (Model B)	2
105	CA157175	Shank-Anvil (CP733)(Incl: 106 & 107)	1
105A	CA157176	Shank-Anvil (CP733-2)(2" longer) (Includes 106 & 107)	1
106	P083071	O-Ring-011	1
107	CA088097	Socket-Retainer Ring	1
108	CA145569	Washer-Rear Clutch	1
109	CA145502	Washer-Motor Clamp	2
113	CA156840	Housing-Clutch (Includes 114)	1
114	CA155145	Bushing-Anvil	1

Tune-Up Kit
CA155125 (Incl: Index Nos. 11, 12, 27, 38, 39, 41, 43, 62, 106, 107)

Repair Kit (CP733A)
CA155126 (Incl: All Parts in Tune-Up Kit Plus Index Nos. 97, 99, 105, 108)

Repair Kit (CP733-2A)
CA155127 (Incl: All Parts in Tune-Up Kit Plus Index Nos. 97, 99, 105A, 108)

Repair Kit (CP733B)
CA157755 (Incl: All Parts in Tune-Up Kit Plus Index Nos. 97, 99, 105, 108)

Repair Kit (CP733-2B)
CA157756 (Incl: All Parts in Tune-Up Kit Plus Index Nos. 97, 99, 105A, 108)

Clutch Kit (Model A to B) CA157757

PRINTED IN USA KEK/07-02