AirToolPro.com by Zampini Industrial Group - Premier Tool Suppliers Since 1987 1-800-353-4676

Desoutter™

The "Mighty Atom™" High Power Drill

The 'Mighty Atom™' – Ergonomics, Power And Productivity

Introducing the new Mighty Atom High Power Drill from CP Desoutter
The ultimate drilling machine providing 'operator comfort', 'power' & 'productivity'

ERGONOMICS & OPERATOR COMFORT

- Pistol grip angle design aids high feed force application for effective drilling
- Aluminium/composite pistol grip construction for enhanced operator comfort

POWER

- Powered by a full 1 Horse Power, oil-free motor to tackle the most demanding applications
- Efficient effective motor to maintain optimum drilling speed

PRODUCTIVITY

- The combination of operator comfort combined with the power of the High Power Drill enhances productivity

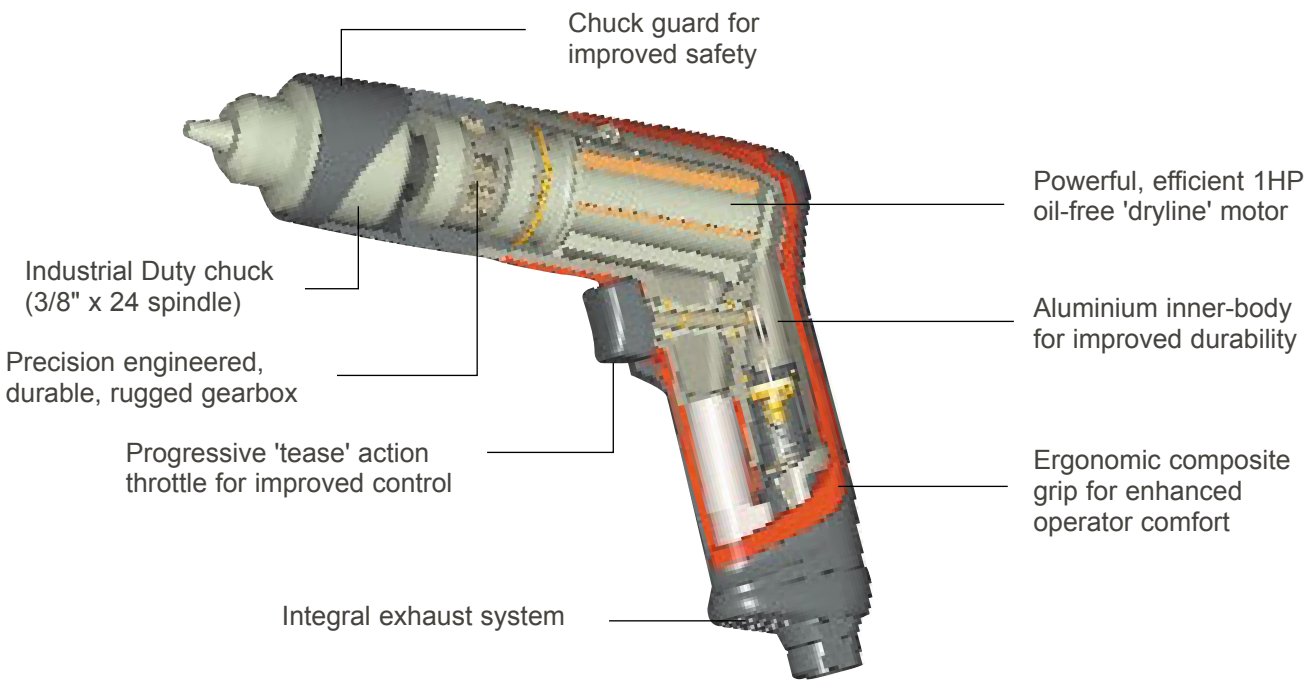

VIBRATION LEVEL - SOUND LEVEL

- Sound level <81 dB(A)
- Vibration level <2.5m/s^2

RELIABILITY & SERVICING

- Modular construction provides ease of servicing
- Minor & major service kits available to ensure a 'right first time' service

Desoutter™

High Power Drill – DR750

Chuck Capacity: Ø 13mm (1/2"), Ø 10mm (3/8"), Ø 8mm (5/16")

A

D

B

E

C

C

(Shown with side handle fitted)

Air Inlet: 1/4" BSP.NPT
Vibration level: <2.5 m/s²

PICTURE REF	MODEL	PART NUMBER	FREE SPEED	CHUCK SIZE		MOTOR POWER		STALL TORQUE		WEIGHT		AIR FLOW		MIN HOSE BORE		SOUND LEVEL
			rpm	mm	in.	kW	Hp	Nm	lbf ins.	kg	lb	l/s	cfm	mm	in.	db(A)
Trigger start - Key Chuck Models																
A	DR750-P6000-C8	1465124	6000	8	5/16"	0.75	1.00	5.3	46	1.1	2.42	14	30	10	3/8"	81
A	DR750-P4100-C8	1465114	4100	8	5/16"	0.75	1.00	7.1	63	1.1	2.42	14	30	10	3/8"	81
B	DR750-P3300-C10	1465104	3300	10	3/8"	0.75	1.00	9.6	85	1.1	2.42	14	30	10	3/8"	81
B	DR750-P2700-C10	1465094	2700	10	3/8"	0.75	1.00	11.1	99	1.1	2.42	14	30	10	3/8"	81
C	DR750-P1300-C10	1465084	1300	10	3/8"	0.75	1.00	23.9	211	1.6	3.52	14	30	10	3/8"	81
C	DR750-P750-C13	1465074	750	13	1/2"	0.75	1.00	41.0	362	1.6	3.52	14	30	10	3/8"	81
Trigger start - Keyless Chuck Models																
D	DR750-P6000-K8	1465164	6000	8	5/16"	0.75	1.00	5.3	46	1.1	2.42	14	30	10	3/8"	81
D	DR750-P4100-K8	1465154	4100	8	5/16"	0.75	1.00	7.1	63	1.1	2.42	14	30	10	3/8"	81
E	DR750-P3300-K10	1465144	3300	10	3/8"	0.75	1.00	9.6	85	1.1	2.42	14	30	10	3/8"	81
E	DR750-P2700-K10	1465134	2700	10	3/8"	0.75	1.00	11.1	99	1.1	2.42	14	30	10	3/8"	81

Desoutter™

Accessories

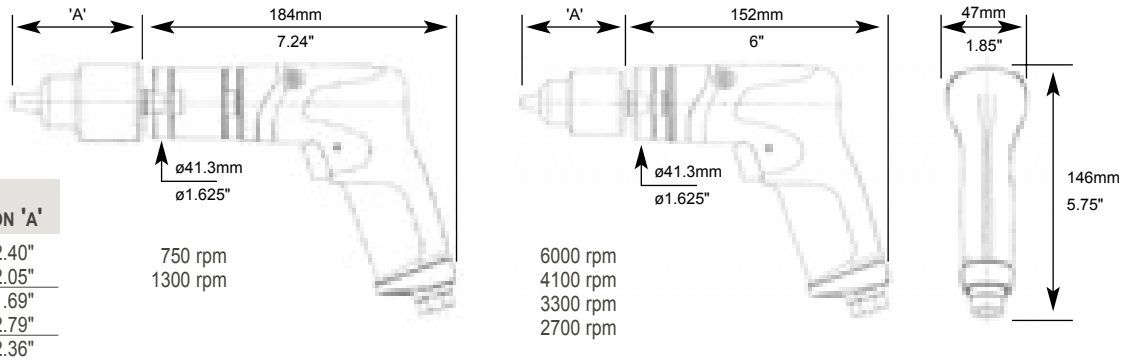

CHUCK DESIGNATION	DIMENSION 'A'
C13	61mm 2.40"
C10	52mm 2.05"
C8	43mm 1.69"
K10	71mm 2.79"
K8	60mm 2.36"

DR750-P...C./ DR750-P...K.

ACCESSORIES INCLUDED	PART NUMBER				
	DR750...C8	DR750...C10	DR750...C13	DR750...K8	DR750...K10
• Chuck threaded 3/8 UNF capacity 5/16"- 8mm (without key)	410203				
• Chuck key	410213				
• Chuck threaded 3/8 UNF capacity 3/8"- 10mm (with key)		31132			
• Chuck key		29232			
• Chuck threaded 3/8 UNF capacity 1/2"- 13mm (with key)			473113		
• Chuck key			29242		
• Keyless Chuck threaded 3/8 UNF capacity 5/16"- 8mm				473433	
• Keyless Chuck threaded 3/8 UNF capacity 3/8"- 10mm					473423
• Chuck Guard	473143	473133	-	-	-
• Side Handle	473173	473173	473173	473173	473173
• Suspension Bail	473153	473153	473153	473153	473153

OPTIONAL ACCESSORIES	PART NO.
• Dust extraction kit	475033

Safety Instructions

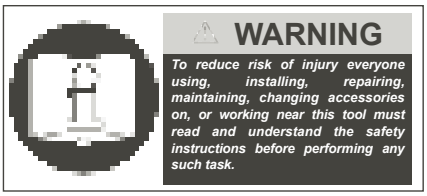

WARNING

To reduce risk of injury everyone using, installing, repairing, maintaining, changing accessories on, or working near this tool must read and understand the safety instructions before performing any such task.

All tools are designed to operate at a line pressure of 6.3 bar +/- 0.15bar in accordance with ISO2787.

Sound levels +/- 3dB(A)* measured in accordance with CAGI-PNEUROP test code or PNEUROP PN8NTC1.2. Vibration values* measured in accordance with ISO 8662.

*These declared values were obtained by laboratory testing in compliance with stated standards and are not adequate for risk assessments. Values measured in individual work places may be higher than the declared values. The actual exposure values and risk of harm experienced by an individual are unique and depend upon the way the user works, the workpiece and the work station design, as well as upon the exposure time and the physical condition of the user. We Desoutter cannot be held liable for the consequences of using declared values, instead of values reflecting the actual exposure, in an individual risk assessment in a work place situation over which we have no control.

Tools are CE marked to comply with European Machinery Directive.

Specifications subject to change without prior notice.

Further occupational health and safety information can be obtained from the following web sites **http://www.osha.gov (USA) http://europe.osha.eu.int (Europe).**

For general product safety instructions please refer to Drilling & Riveting catalogue.

Drills

- Keep away from rotating bit and chuck. You can become cut or burned if you come in contact with the drill bit, chips/swarf of work surface.
- Use intermittent drill pressure to avoid long shaved chips/swarf.
- The drill bit can suddenly bind and cause the work piece or tool to rotate causing arm and shoulder injuries.
- It is recommended that side handles are used for operator comfort and safety on high torque drilling applications above 3.5Nm (2.6 lbft) on straight case tools and 11.5Nm (8.5lbft) on pistol grip drills. Drills with a chuck capacity larger than 10mm (3/8") should always be used with a side handle.
- For further information on the general safety instructions for the operation of power tools please refer to the Desoutter Drilling & Riveting catalogue or the tool operating instructions supplied with the tool.

Applications

- Aerospace
- Fabrication
- Rolling Stock
- Coach Building