AirToolPro.com by Zampini Industrial Group - Premier Tool Suppliers Since 1987 1-800-353-4676

PT Series

Desoutter™

Desoutter Limited Eaton Road Hemel Hempstead Hertfordshire HP2 7DR England .

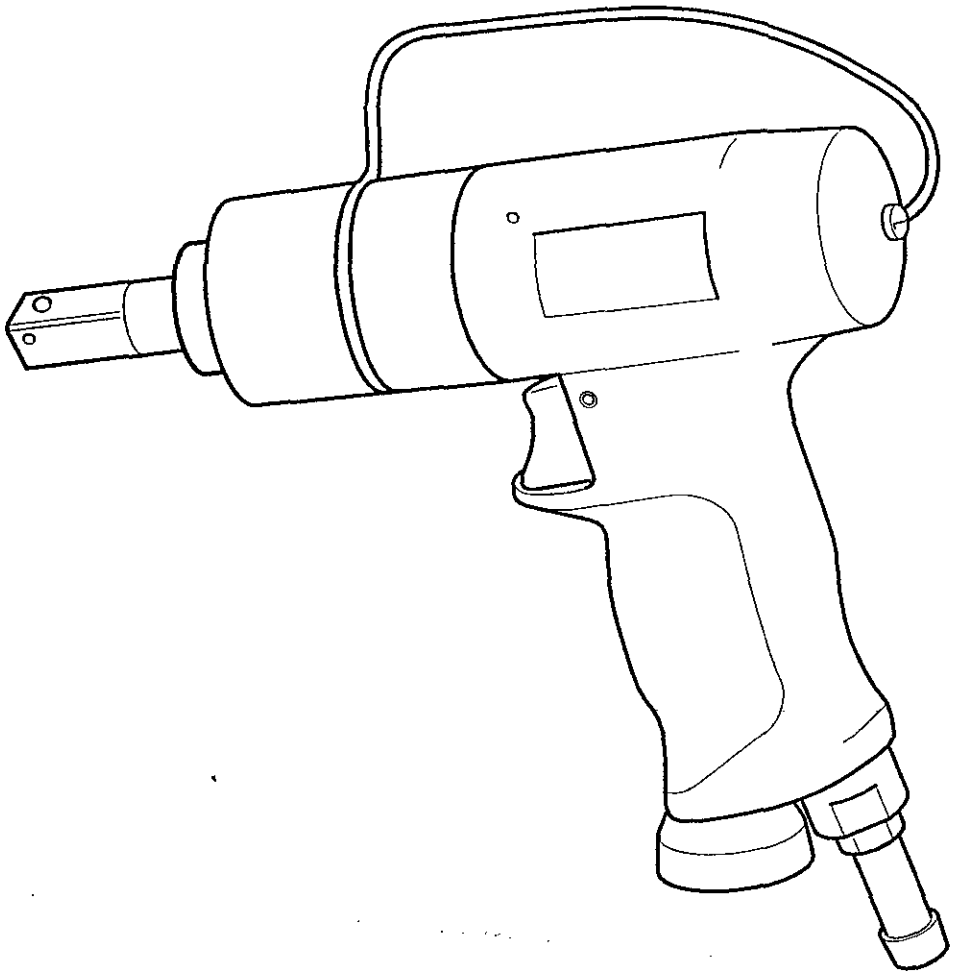

PT035 T 9000 I10S
1461424-C

GB Servicing and Operating Instructions	F Manuel d'entretien Manuel d'utilisation	P Instruções de Manutenção Instruções de Funcionamento	GR Οδηγίες Συντήρησης Οδηγίες Λειτουργίας	DK Servicevejledning Betjeningsvejledning	S Serviceinstruktioner Bruksanvisning
D Wartungsanleitung Bedienungsanleitung	E Instrucciones de Servicio Instrucciones de Operación	I Istruzioni per l'installazione e l'uso	NL Servicehandleiding en Bedieningsvoorschriften	N Serviceinstruksjoner Driftsinstruksjoner	FIN Huolto-ohjeet Käyttöohjeet

AirToolPro.com by Zampini Industrial Group - Premier Tool Suppliers Since 1987 1-800-353-4676

PT035-T

Desoutter™

Desoutter Limited Eaton Road Hemel Hempstead Hertfordshire HP2 7DR England

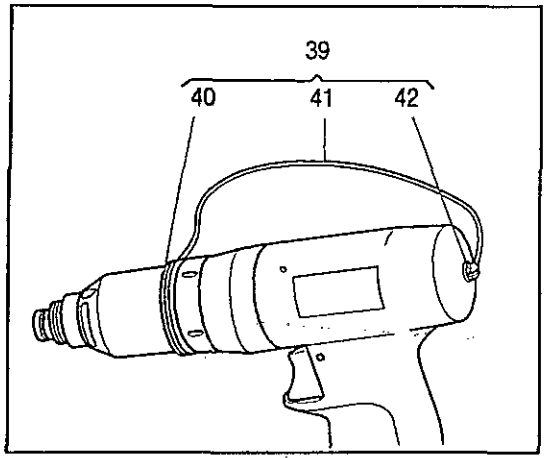

SUSPENSION YOKE (SWIVEL) - OPTIONAL

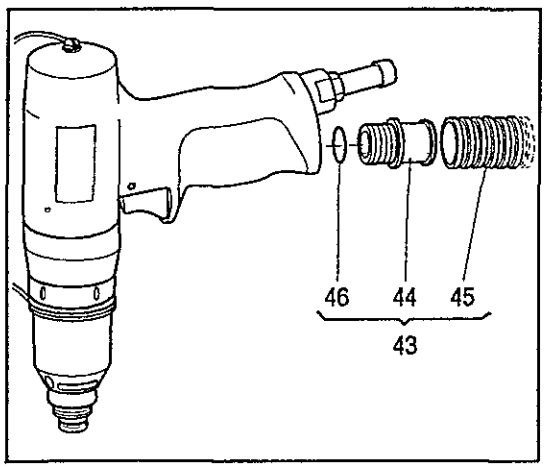

PIPED AWAY EXHAUST KIT OPTIONAL

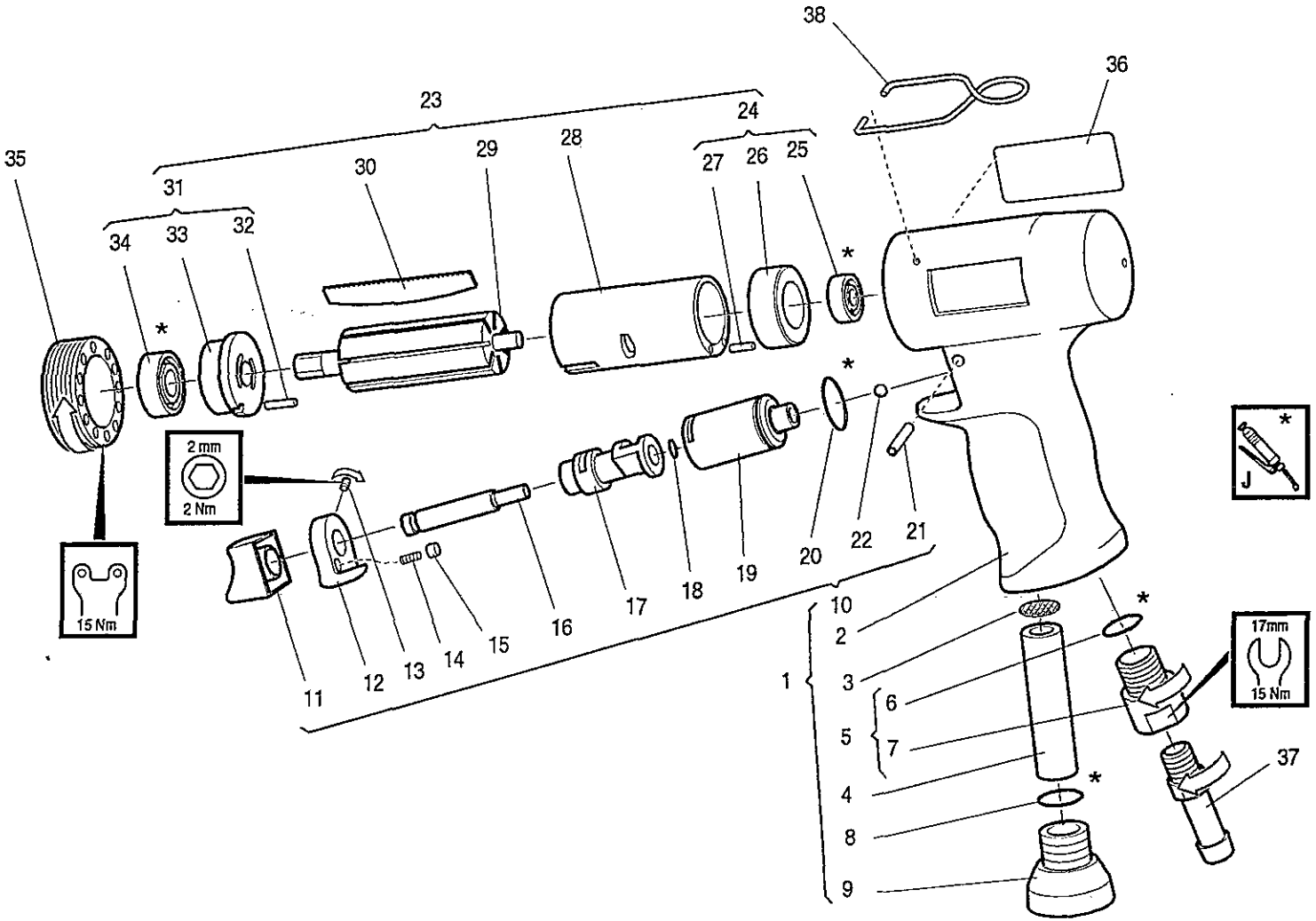

AirToolPro.com by Zampini Industrial Group - Premier Tool Suppliers Since 1987 1-800-353-4676

PT035-T **Parts List**

Desoutter™

Desoutter Limited Eaton Road Hemel Hempstead Hertfordshire HP2 7DR England

Item Ps. Nr. No. Article	Part No Teil Nr. Référence	Description Beschreibung Description	Qty Menge Qté
1	453803	Motor Casing, compl.	1
2		Motor Casing	1
3	451653	Strainer	1
4	452923	Tube	1
5	453903	Adapter, compl. (1/4" BSP)	1
*6	450683	O-Ring (15.1 x 1.6)	1
7		Adapter	1
*8	450683	O-Ring (15.1 x 1.6)	1
9	452853	Silencer, compl.	1
10	453823	Valve, compl.	1
11	453863	Push Button	1
12	453843	Reversing Knob	1
13	449933	Stop Screw (S8SS 4 x 5)	1
14	452583	Spring	1
15	452593	Retainer Pin	1
16	453853	Valve Pin	1
17	453833	Reversing Valve	1
18	450113	Lockring (D6)	1
19	453813	Valve Sleeve	1
*20	450683	O-Ring (15.1 x 1.6)	1
21	449853	Pin (RPB 2 x 20)	1
22	450293	Ball (6mm)	1
23	453763	Motor, compl.	1
24	453723	End Plate, compl.	1
*25	450183	Ball Bearing (625-Z).	1
26		End Plate	1
27	449813	Pin (CP 2 x 8)	1
28	453713	Cylinder	1
29	453753	Rotor	1
*30	453773	Vane Set	7
31	453743	End Plate, compl.	1
32	450133	Key (RK 2 x 2 x 10)	1
33	453733	End Plate	1
*34	450193	Ball Bearing (608-Z)	1
35	453793	Ring Screw	1
36		Data Plate	1

Item Ps. Nr. No. Article	Part No Teil Nr. Référence	Description Beschreibung Description	Qty Menge Qté
Accessories Included			
37	453983	Hose Nipple (8mm, 1/4")	1
38	451393	Suspension Yoke	1
Optional Accessories			
39	453953	Suspension Yoke, compl.	1
40		Bearing	1
41		Suspension Yoke	1
42	453943	Holding Screw	1
43	453923	Exhaust Kit, compl.	1
44		Hose Nipple	1
45		Exhaust Hose	1
*46	450693	O-Ring	1
47	452853	Silencer, compl.	1
	453963	Service Kit (contains items 106, 108, 110, 112)	1
	457883	Hydraulic Oil kit	1
Alternative Accessories			
5	453913	Adapter, compl. (1/4" NPT)	1

GB * Indicates normal replacement items. It is recommended that adequate stocks are held for servicing requirements.
Always quote tool model number, serial number and spare part number when ordering spares.

D * Bedeutet normale Verschleißteile. Es empfiehlt sich eine angemessene Menge für Wartungszwecke auf Lager zu halten.
Bei der Bestullung von Ersatzteilen, bitte immer angeben: Typennummer der Bohrmaschine, Werknummer und Ersatzteilnummer.

F * Le symbole astérisque (*) indique des articles de rechange normaux. Il est recommandé d'en conserver des stocks suffisants pour assurer toutes les opérations d'entretien courant.
Lors de la commande de pièces de rechange, toujours citer le numéro de modèle de l'outillage, son numéro de série et le numéro de référence de chaque pièce de rechange.

E * Indica elementos de reposición regular. Se recomienda tener una cantidad adecuada de los mismos en reserva a efectos de mantenimiento.
Al encargar piezas de recambio, siempre debe indicarse el número de modelo de la herramienta, su número de serie y el número de la pieza de recambio.

P * Indica itens que são substituídos regularmente. É recomendado que estoques adequados sejam mantidos para requisitos de manutenção.
Cite sempre o número do modêlo da ferramenta, número de série, e número da peça accesória quando pedindo acessórios.

I * L'asterisco denota recambi normali. Si consiglia di mantenere scorte adeguate alle esigenze della manutenzione.
Nell'ordinazione di ricambi citare il numero di modello dell'utensile, il numero di matricola e quello di catalogo del pezzo.

GR * Σημαίνει συνηθισμένα είδη (τεμάχια) για αντικατάσταση. Σας συνιστύμε να τηρείτε αρκετό απόθεμα από τα είδη που χρειάζονται αντικατάσταση.
Οταν παραγγέλνετε ανταλλακτικά πάντα να γράφετε τον αιρθμό μοντέλου του εργαλείου, τον αριθμό σειράς και τον αριθμό ανταλλακτικού.

NL * Betekent normale reserveartikelen. Het verdient aanbeveling om voldoende voor onderhoudsbehoeften vooradig te hebben.
Bij bestelling van reserveonderdelen geef altijd modelnummer, volgnummer en reserveonderdeelnummer van het werktuig op.

DK * Indikerer normale udskiftningsemner. Det anbefales at have rigelige forsyninger af dele til brug i forbindelse med eftersyn.
Opgiv altid det korrekte værktøjsmodelnummer, serienummer og reservedelsnummer ved bestilling af reservedele.

N * Angir normale reservedeler. Det anbefales at tilstrekkelig antall reservedeler holdes på lager.
Ved bestilling av deler må man alltid oppgi verktøyets modellnr., serienr. og reservedelens nr.

S * Utmärker normala reservdelar. Vi rekommenderar att tillräckligt antal lagras för serviceändamål.
Uppge alltid verktygets modellnummer, serienummer samt reservdelens nummer vid beställtning av reservdelar.

FIN * Viittaa tavallisiin varaosiin. Suosittelemme, että riittäviä määriä pidetään varastossa huoltotarpeita varten.
Työkalun mallinumero, sarjanumero ja varasosan numero on aina mainittava tilattaessa.

AirToolPro.com by Zampini Industrial Group - Premier Tool Suppliers Since 1987 1-800-353-4676

PT035-T

Desoutter™

Desoutter Limited Eaton Road Hemel Hempstead Hertfordshire HP2 7DR England

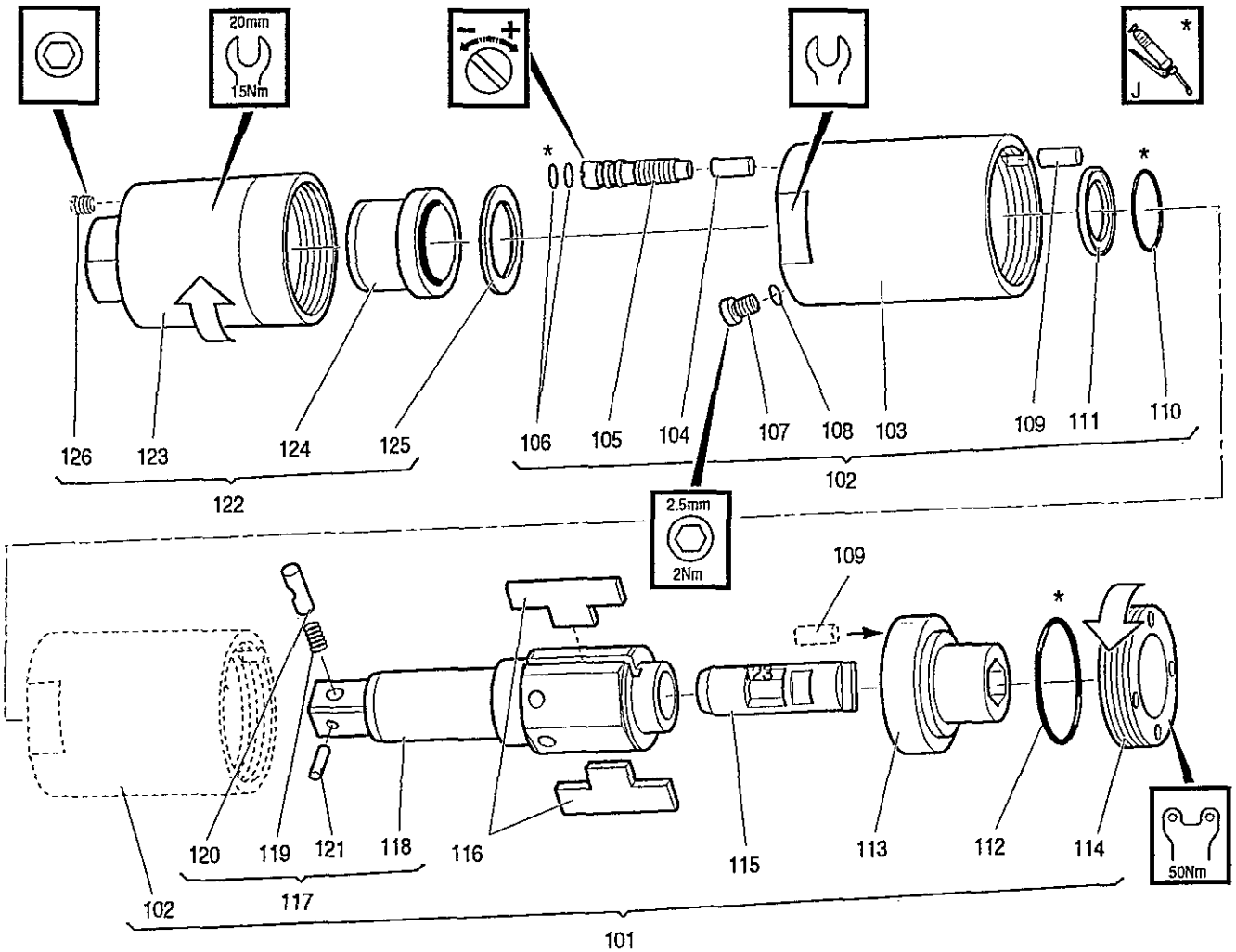

AirToolPro.com by Zampini Industrial Group - Premier Tool Suppliers Since 1987 1-800-353-4676

PT035-T **Parts List**

Desoutter™

Desoutter Limited Eaton Road Hemel Hempstead Hertfordshire HP2 7DR England

Item Ps. Nr. No. Article	Part No Teil Nr. Référence	Description Beschreibung Description	Qty Menge Qté
101	453603	Pulse Unit	1
102	453613	Housing, compl.	1
103		Housing	1
104	449833	Valve (CPK 3 x 8)	1
105	453623	Adjustment Screw	1
*106	450533	O-Ring (2.1 x 1.3 Viton)	2
107	453633	Plug	1
*108	450743	O-Ring (3.1 x 1.6 Viton)	1
109	450283	Pin (2.5 x 7.8)	1
110	450573	O-Ring (12.3 x 2.4 Viton)	1
111	450353	Support Ring (13/17 Hytrel)	1
*112	450473	O-Ring (25 x 2 Viton)	1
113	453583	End Part	1
114	453573	Ring Screw	1
115	453563	Cam Shaft	1
116	453553	Vane	2
117	454073	Anvil, compl.	1
118		Anvil	1
119	451313	Spring	1
120	452603	Retaining Pin	1
121	449873	Pin (FRP 1, 5 x 8)	1
122	453893	Pulse Unit Housing, compl.	1
123		Pulse Unit Housing	1
124	453783	Bushing	1
125	453933	Washer	1
126	453643	Plug	1
Service Equipment			
A	451133	Clamp	1
B	451123	Puller	1
C	450963	Mandrel	1
D	451143	*Assembly Plate*	1
E	451163	Mandrel	1
F	451173	Syringe	1
G	451103	Face Spanner Adj.	1
H	451243	Face Spanner	1
J	450933	Grease Gun	1

GB * Indicates normal replacement items. It is recommended that adequate stocks are held for servicing requirements.
Always quote tool model number, serial number and spare part number when ordering spares.

D * Bedeutet normale Verschleißteile. Es empfiehlt sich eine angemessene Menge für Wartungszwecke auf Lager zu halten.
Bei der Bestullung von Ersatzteilen, bitte immer angeben: Typennummer der Bohrmaschine, Werknummer und Ersatzteilnummer.

F * Le symbole astérisque (*) indique des articles de rechange normaux. Il est recommandé d'en conserver des stocks suffisants pour assurer toutes les opérations d'entretien courant.
Lors de la commande de pièces de rechange, toujours citer le numéro de modèle de l'outillage, son numéro de série et le numéro de référence de chaque pièce de rechange.

E * Indica elementos de reposición regular. Se recomienda tener una cantidad adecuada de los mismos en reserva a efectos de mantenimiento.
Al encargar piezas de recambio, siempre debe indicarse el número de modelo de la herramienta, su número de serie y el número de la pieza de recambio.

P * Indica itens que são substituidos regularmente. É recomendado que estoques adequados sejam mantidos para requisitos de manutenção.
Cite sempre o número do modêlo da ferramenta, número de série, e número da peça accesória quando pedindo acessórios.

I * L'asterisco denota recambi normali. Si consiglia di mantenere scorte adeguate alle esigenze della manutenzione.
Nell'ordinazione di ricambi citare il numero di modello dell'utensile, il numero di matricola e quello di catalogo del pezzo.

GR * Σημαίνει συνηθισμένα είδη (τεμάχια) για αντικατάσταση. Σας συνιστύμε να τηρείτε αρκετό απόθεμα από τα είδη που χρειάζονται αντικατάσταση.
Οταν παραγγέλνετε ανταλλακτικά πάντα να γράφετε τον αιρθμό μοντέλου του εργαλείου, τον αριθμό σειράς και τον αριθμό ανταλλακτικού.

NL * Betekent normale reserveartikelen. Het verdient aanbeveling om voldoende voor onderhoudsbehoeften vooradig te hebben.
Bij bestelling van reserveonderdelen geef altijd modelnummer, volgnummer *en reserveonderdeelnummer van het werktuig op.*

DK * Indikerer normale udskiftningsemner. Det anbefales at have rigelige forsyninger af dele til brug i forbindelse med eftersyn.
Opgiv altid det korrekte værktøjsmodelnummer, serienummer og reservedelsnummer ved bestilling af reservedele.

N * Angir normale reservedeler. Det anbefales at tilstrekkelig antall reservedeler holdes på lager.
Ved bestilling av deler må man alltid oppgi verktøyets modellnr., serienr. og reservedelens nr.

S * Utmärker normala reservdelar. Vi rekommenderar att tillräckligt antal lagras för serviceändamål.
Uppge alltid verktygets modellnummer, serienummer samt reservdelens nummer vid beställtning av reservdelar.

FIN * Viittaa tavallisiin varaosiin. Suosittelemme, että riittäviä määriä pidetään varastossa huoltotarpeita varten.
Työkalun mallinumero, sarjanumero ja varasosan numero on aina mainittava tilattaessa.

AirToolPro.com by Zampini Industrial Group - Premier Tool Suppliers Since 1987 1-800-353-4676

PT035-T **Oil Level**

Desoutter Limited Eaton Road Hemel Hempstead Hertfordshire HP2 7DR England

Assembly

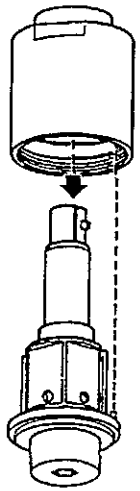

5

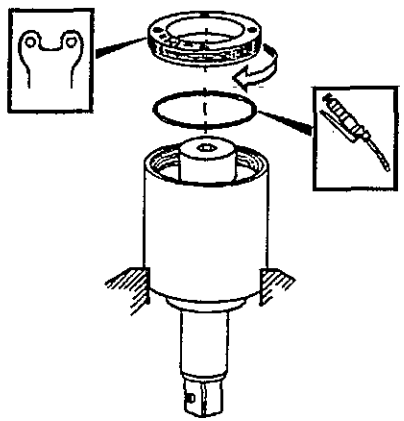

6

Setting theTorque

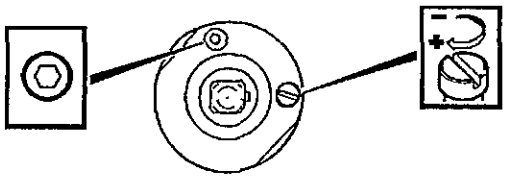

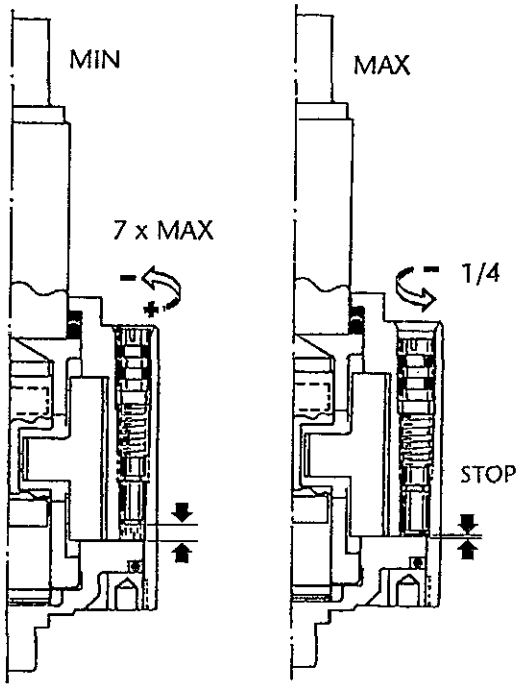

Oil Level

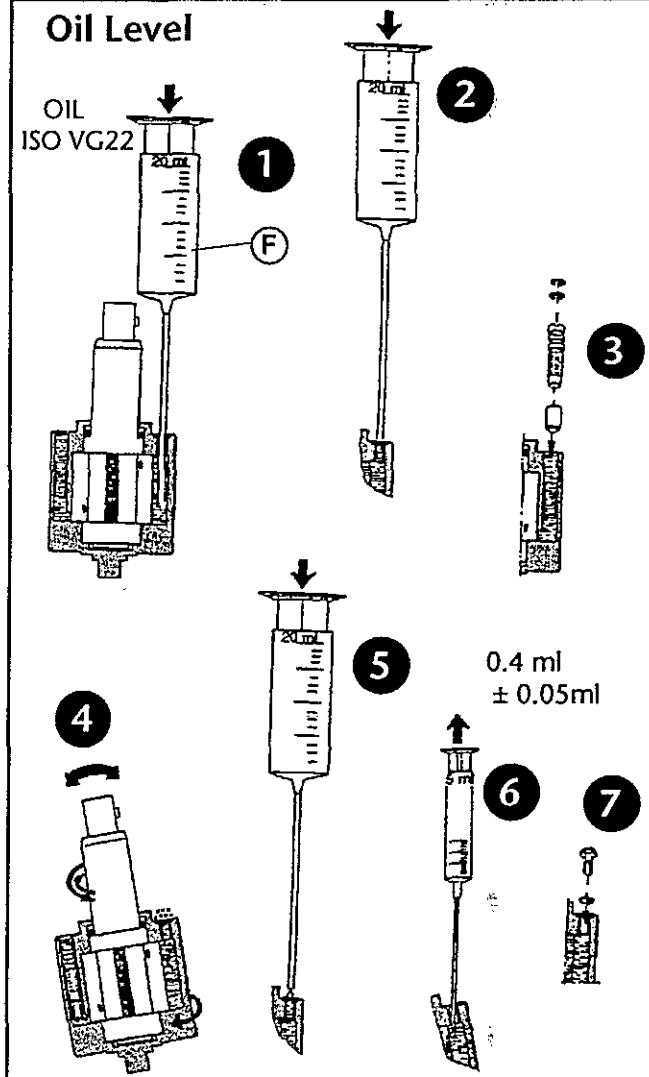

AirToolPro.com by Zampini Industrial Group - Premier Tool Suppliers Since 1987 1-800-353-4676

PT035-T Dismantling:Inspection and Assembly

Desoutter Limited Eaton Road Hemel Hempstead Hertfordshire HP2 7DR England

Dismantling

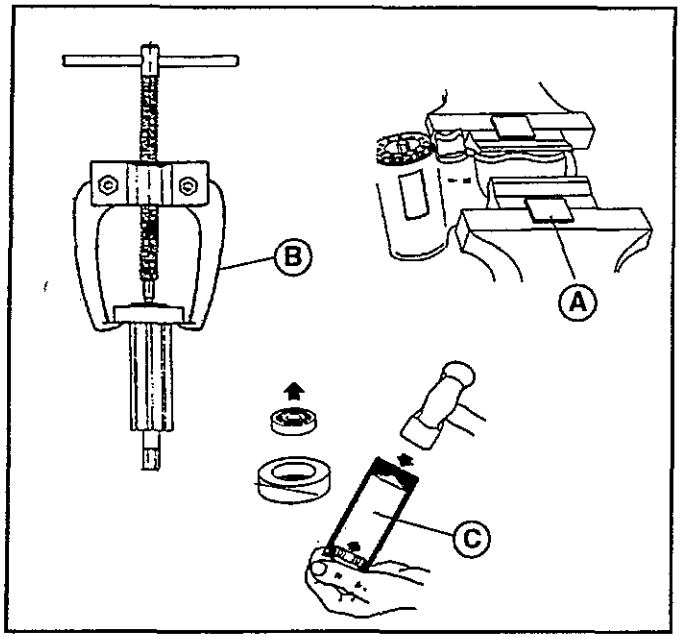

Inspection and Assembly

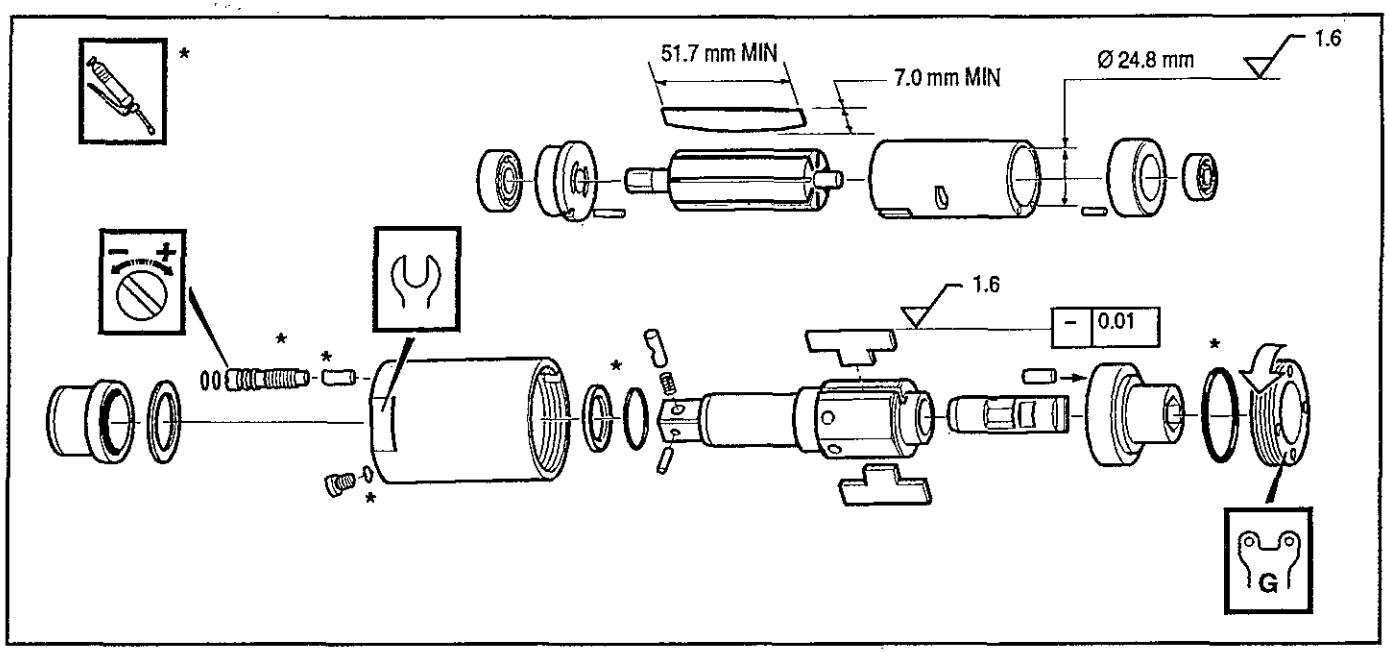

Testing

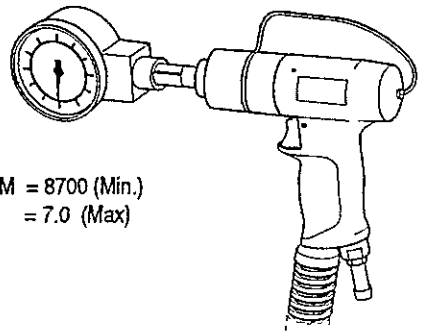

RPM = 8700 (Min.)
L/s = 7.0 (Max)

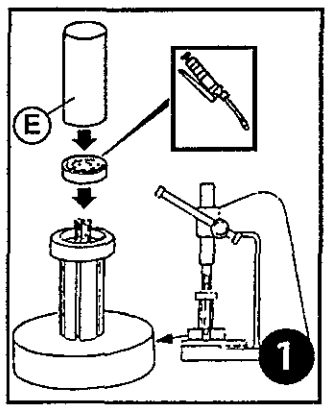

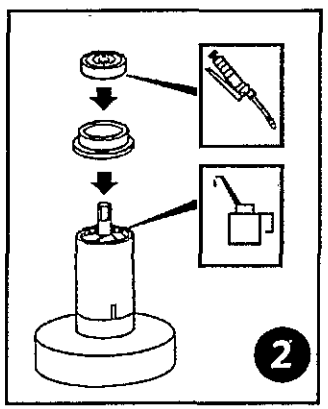

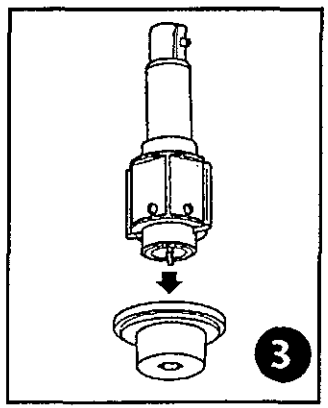

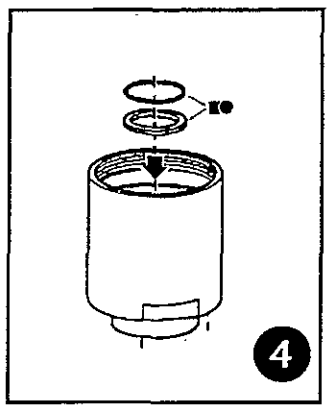

AirToolPro.com by Zampini Industrial Group - Premier Tool Suppliers Since 1987 1-800-353-4676

PT035-T **Data**

Desoutter™

Desoutter Limited Eaton Road Hemel Hempstead Hertfordshire HP2 7DR England

GB

Noise and Vibration Declaration Statement

Sound Pressure Level (dBA) = 75 ± 3 re. PN8NTC1.2 Test code
Vibration Level (m/s²) = <2.5 re ISO 8662/7

These declared values were obtained by laboratory type testing in compliance with the stated standards and are not adequate for use in risk assessments. Values measured in individual work places may be higher than the declared values. The actual exposure values and risk of harm experienced by an individual user are unique and depend upon the way the user works, the workpiece and the workstation design, as well as upon the exposure time and the physical condition of the user.

We, Desoutter, cannot be held liable for the consequences of using the declared values, instead of values reflecting the actual exposure, in an individual risk assessment in a work place situation over which we have no control.

D

Geräusch- und Vibrationsangaben

Schalldruck: (dBA) = 75 ± 3 re. PN8NTC1.2 Test code
Vibrationen (m/s²) = < 2.5 re. ISO 8662/7

Diese Werte wurden im Labor durch Typprüfungen gemäß den angegebenen Normen ermittelt, sie sind nicht brauchbar zur Risiko *Abschätzung. Werte in der individuellen Arbeitsumgebung können* höher als die angegebenen sein. Die tatsächlichen Werte und die Schadensrisiken, denen man ausgesetzt ist, sind stets unterschiedlich und beruhen auf der Art, wie man arbeitet, auf der Beschaffenheit des Werkstücks, auf den Gegebenheiten des Arbeitsplatzes sowie auf der Belastungszeit und der Kondition des Benutzers.

Wir, Desoutter, können nicht für die Konsequenzen verantwortlich gemacht werden, die entstehen können aus der Verwendung der angegebenen anstatt der zu ermittelnden Werte entsprechend der tatsächlichen Belastunq gemäß einer individuellen Risiko-*Abschätzung der Arbeitsumgebung, die wir nicht beeinflussen* können.

P

Declaração de nível de ruído e vibrações

Nível de pressão do ruído (dBA) = 75 ± 3 ref. Código de ensaio PN8NTC1.2
Alcance de vibração (m/s²) = < 2.5 re. ISO 8662/7

Os valores declarados foram testados em laboratório de acordo com os standards e não estão adequados para o uso de determinados riscos. Medição de valores em local de trabalho individual talvez sejam maiores do que os valores declarados. O valor exposto e risco de dano por um utilizador é úniko e depende da sua utilização, peca e local de trabalho, assim como de intempéries e condições fisicas do utilizador.

Nós, Desoutter, não poderemos ser responsável pelos valores expostos num determinado bcai de trabalho onde não temos controlo.

F

Rapport de declaration des niveaux de bruit et vibrations

Niveau de Pression Sonore (dBA) = 75 ± 3 ref PN8NTC1.2 Test code
Limites de vibration (m/s²) = < 2.5 ref. ISO 8662/7

Ces valeurs sont mesurées par un laboratoire d'essais conformément aux normes en vigueur; en aucun cas elles ne peuvent être utilisées pour l'évaluation des risques. Les valeurs mesurées en travail peuvent être plus elevées que les valeurs declarées. Les valeurs réelles d'exposition et les dommages physiques résultant de l'exposition aux vibrations sont spécifiques et dependent de la façon dont l'utilisateur travaille, de la pièce travaillée et de sa forme, ainsi que du temps d'exposition et des capacites physiques de l'utilisateur.

La Societe, Desoutter, ne peut être tenue pour responsable des dommages causés par des niveaux réels plus éléves que les niveaux *déclarés, n'ayant elle-même aucun contrôle sur l'utilisation des* machines.

E

Declaración sobre ruido y vibraciones

Nivel de presión sonora (dBA) = 75 ± 3 re. PN8NTC1.2 Código de ensayo.
Banda de vibraciones (m/s²) = < 2.5 re. ISO 8662/7

Estos datos que se declaran se obtuvieron en pruebas de laboratorio de acuerdo con los estándares indicados, y no son apropiados para usar en la evaluación de riesgos. Los valores que se midan en puestos de trabajo individuales pueden ser superiores a los declarados. Los datos reales de exposición y el riesgo de daños que puede sufrir un operario concreto son únicos y dependen de la forma en que el operario trabaja, el diseño de la pieza de trabajo y del puesto, así como el tiempo de exposición y las condiciones físicas del operario.

A nosotros, Desoutter, no se nos puede considerar responsables de las consecuencias de usar los valores declarados, en vez de los valores *que reflejen la exposición real, en la evaluación de los riesgos* potenciales de un puesto de trabajo sobre el que no tenemos control.

I

Dichiarazione dei livelli di rumorosità e vibrazioni

Livello di pressione sonora (dBA) = 75 ± 3 come de PN8NTC1.2
Livello di vibrazioni (m/s²) = < 2.5 come de ISO 8662/7

I livelli dichiarati sono ottenuti da prove di laboratorio secondo le *normative vigenti, ma non possono essere utilizati come valutazione* di rischio. I livelli misurati in differenti ambienti di lavoro possono risultare più elevati rispetto a quelli dichiarati. Gli effettivi livelli di esposizione e di rischio di infortunio sono propri di ogni singolo impiego e dipendono dal modo d'uso da parte dell'operatore, dal tipo di applicazione e dalla postazione di lavoro, così come dal tempo di esposizione e dalle condizioni fisiche dell'operatore.

Noi, Desoutter, non possiamo essere ritenuti responsabili delle conseguenze derivanti dal considerare i livelli dichiarati anziché i reali livelli di esposizione, in singole valutazioni di rischio, nelle *situazioni di lavoro di cui non abbiamo alcun controllo.*

PT035-T **Data**

Desoutter™

Desoutter Limited Eaton Road Hemel Hempstead Hertfordshire HP2 7DR England

NL

Verklaring betreffende geluids- en trillingswaarden

Geluidspeil (dBA) = 75 ± 3 volgens de PN8NTC1.2 testcode
Trillingsbereik (m/s²) = < 2.5 zie. ISO 8662/7

Deze opgegeven waarden zijn verkregen tijdens laboratorium type-testen volgens de bovengenoemde normen, en zijn niet geschikt voor gebruik bij risicoanalyse. Gemeten waarden kunnen in individuele werkomstandigheden afwijken van de opgegeven waarden. De werkelijke waarden en risico's waaraan een individuele gebruiker wordt blootgesteld zijn onder meer afhankelijk van: de werkwijze, het werkstuk, de werkomgeving, de blootstellingsduur en de lichamelijke conditie van de gebruiker.

Wij,Desoutter, kunnen niet verantwoordelijk worden gehouden voor de gevolgen van het gebruik van de opgegeven waarden, in plaats van waarden die overeenkomen met de werkelijke blootstelling, bij een individuele risicoanalyse van werkomstandigheden waarop wij geen invloed hebben.

N

Lyd og vibrasjons deklarasjon

Lydtrykksnivå (dBA) = 75 ± 3 ref PN8NTC1.2 Test Kode
Vibrasjonsnivå (m/s²) = < 2,5 ref ISO 8662/7

De oppgitte verdiene er laboratorieverdier i henhold til nevnte standarder og er ikke adekvate for bruk i risikovurderinger. Verdier målt på den enkelte arbeidsplass kan være høyere enn de oppgitte verdiene. De aktuelle eksponeringsverdier og individuell skaderisko er unike og avhenger av måten brukeren arbeider på, arbeidsstykket og arbeidsplassens utforming, såvel som eksponeringstid og brukerens fysiske kondisjon.

Vi, Desoutter, kan ikke holdes ansvarlig for konsekvensene ved bruk av oppgitte verdier, istedet for aktuelle eksponeringsverdier, i en individuell risikovurdering av en arbeidssituasjon utenfor vår kontroll.

S

Lausunto koskien ilmoitettuja melu- ja tärinäarvoja

Ljudtrycksnivå (dBA) = 75 ± 3 re PN8NTC1.2 Test Kodex
Vibrationsregister (m/s²) = <2.5 re ISO 8662/7

Dessa deklarerade värden har erhållits vid typtestning i laboratorium enligt angivna standarder. De är inte avsedda för användning vid riskbedömningar. De värden som erhålles vid mätning på enskilda arbetsplatser kan vara högre än dessa deklarerade värden. De faktiska exponeringsvärdena och den risk för skada som en enskild användare kan utsättas för är unika. De beror på användarens arbetssätt, arbetsstycket och utformningen av arbetsplatsen samt av exponeringstiden och användarens fysiska förutsättningar.

Vi, Desoutter, kan inte göras ansvariga för konsekvenserna av att använda deklarerade värden vid individuella riskbedömningar, eftersom vi inte har någon möjlighet att utöva en fortlöpande kontroll av förhållandena på berörda arbetsplatser.

DK

Lyd og vibrations deklarationer

Lydtrykniveau (dBA) = 75 ± 3 re PN8NTC1.2 Prøve
Vibrationsniveau (m/s²) = <2.5 re ISO 8662/7

Disse deklarationsværdier er opnået ved målinger på laboratorie i overensstemmelse med de opstillede standarder og er ikke direkte anvendelige til risikovurderinger. De målte værdier på den individuelle arbejdsplads kan således godt være højere end de deklarerede værdier. De aktuelle lyd - og virationsbelastninger som påvirker brugeren er afhængige af den måde brugeren arbejder på, emnet der arbejdes med og arbejdspladsens indretning såvel som exponeringstid og brugerens fysik.

Vi, Desoutter, kan ikke drages til ansvar for konsekvenserne af at anvende de deklarerede værdier i stedet for at anvende de værdier som afspejler den aktuelle belastning målt på arbejdsstedet og som skal ligge til grund for risikovurdering af en arbejdssituation som vi ikke har kontrol over.

FIN

Lausunto koskien ilmoitettuja melu- ja tärinäarvoja

Äänipaineen taso (dBA) = 75 ± 3 viite PN8NTC1.2 Testikoodi
Värinäetäisyys (m/s²) = <2.5 viite ISO 8662/7

Ilmoitetut arvot perustuvat laboratorio-oloissa suoritettuihin, standardien mukaisiin mittauksiin ja ne eivät sovellu riskitason määrittämisen perustaksi. Todelliset altistumisarvot ja käyttäjän henkilökohtainen teveysriski ovat yksilöllisiä ja riippuvat käytäjän työtavasta, työkappaleesta ja työpaikan suunnittelusta sekä altistusajasta ja käyttäjän fyysisestä kunnosta.

Desoutter ei vastaa mahdollisista seurauksista, mikäli ilmoitettuja arvoja käyetään riskin määrittämiseen todellisessa työtilanteessa tapahtuvaa, yksilöllistä altistumista varten olosuhteissa, jotka eivät ole valvonnassamme.

GR

Δήλωση περί θορύβου και κραδασμών

Επίπεδα Θορύβου (dBA) = 75 ± 3 re PN8NTC1.2 Test code
Επίπεδα Δονήσεως (m/s²) = <2.5 re ISO 8662/7

Οι τιμές που δηλώνονται ελήφθησαν με εργαστηριακού τύπου μετρήσεις, σε συμμόρφωση με τους αναφερόμενους κώδικες και δεν θεωρούνται επαρκείς να χρησιμοποιηθούν για την εκτίμηση κινδύνων. Τιμές που μετρώνται σε διαφόρους χωρους εργασίας είναι πιθανόν να είναι υψηλότερες από αυτές που δηλώνονται. Οι πραγματικές τιμές και ο κίνδυνος βλάβης στον οποίο εκτίθεται ένας χρήστης είναι μοναδικές και εξαρτώνται από τον τρόπο εργασιας, το αντικείμενο εργασίας, τον σχεδιασμό του χώρου εργασιας όπως επίσης τον χρόνο εκθέσεως και την φυσικη κατάσταση του χρήστη.

Εμείς,Desoutter, δεν είναι δυνατόν να θεωρηθούμε υπεύθυνοι για τις συνέπειες από την χρήση των δεδηλωμένων τιμών, αντί αυτών που αντιπροσωπεύουν την πραγματική έκθεση σε κίνδυνο, σε χώρο εργασίας του οποίου δεν είναι δυνατόν να έχουμε τον έλεγχο.

AirToolPro.com by Zampini Industrial Group - Premier Tool Suppliers Since 1987 1-800-353-4676

PT035-T Instructions

GB

Desoutter™

Desoutter Limited Eaton Road Hemel Hempstead Hertfordshire HP2 7DR England

WARNING

BEFORE USING, INSTALLING, REPAIRING OR CHANGING ACCESSORIES, READ AND UNDERSTAND THESE INSTRUCTIONS

WARNING

1. Use an air supply which is: water free, filtered and regulated to 6.3 bar.
2. Use impact quality sockets, in good condition.
3. Eye and ear protection must be worn.
4. Disconnect the air supply before handling the socket, adjusting the impulse unit or dismantling the tool.
5. Keep loose articles of clothing and long hair away from the tool when in use.
6. Hold the tool correctly; be ready to counteract normal or sudden movements - have both hands available.
7. Immediately after adjusting the impulse unit, check for correct operation.
8. Do not use with reduced air pressure or in a worn condition: the impulse unit may not operate, resulting in sudden rotation of the tool handle.
9. Ensure that the workpiece is properly supported.
10. Must not be used in explosive atmospheres.
11. Power tools are not insulated from coming into contact with electric power.

WARNING

VITON RUBBER COMPONENTS

IN THE EVENT OF FIRE, HIGHLY TOXIC COMBUSTION PRODUCTS (INCLUDING HYDROGEN FLUORIDE) CAN CAUSE SEVERE PERSONAL INJURY.
DO NOT HEAT ABOVE 300°C.
DO NOT USE A HEAT GUN TO DISMANTLE PULSE UNIT.

STATEMENT OF USE

This product is designed for installing and removing of threaded fasteners. No other use permitted.

LUBRICATION

This tool is designed to operate on a dry air line. It can also operate on a lubricated air line. Service life, and performance may be enhanced when a lubricated air line is used.

WEIGHT

0.95 kg.

ACCESSORIES

A range of accessories are available and suitable items should be selected from the Accessories Catalogue.

AIR QUALITY

- For optimum performance and maximum machine life we recom mend use of compressed air with a dew point between +2°C and +10°C.
- Use a separate air filter installed as close as possible to the machine. Blow out the hose before connecting.
- There is no disadvantage for the operation of the machine if the compressed air contains a small quantity of oil (1-5 mg/m3). Air quality according to ISO/TC 118, quality class 2.4.3. or 3.4.4. is recommended.
- With extremely dry air, service life of vanes may be reduced.

Compressed air connection and hose size - see the spare parts list. Make sure that the hose size is correct.

SETTING OF TIGHTENING TORQUE

The torque is adjusted by setting the adjusting screw with a groove. Do not mix up the adjusting screw and the oil filling plug with hex. key hole. The adjusting screw is to be turned clockwise to increase the tightening torque.

Note: It is recommended to start at min. torque setting - when the adjustment screw is screwed out approx. 7 turns from the bottom position. Do not screw out more than 8 turns from max.

Min. torque setting:
Set the adjusting screw at min level . At hard joints and min. setting, reduced air pressure will improve the accuracy.

Check the tightening torque given on the joint in question.

The adjusting screw is accessible through the hole in the housing. If necessary, turn the outgoing spindle.
After adjusting do not forget to assemble the plug in the hole in the housing.

CHECKING THE OIL IN THE PULSE-UNIT

The oil level shall be checked after every 50,000 tightenings, see Page 7.
If the tightening torque tends to be remarkably lower than the setting made, or if the pulse frequency goes up - check the oil level and fill with hydraulic oil according to the instructions.
Change the oil at the overhauls. Use hydraulic oil: 22cST/40°C (ISOVG22)

RUST PROTECTION AND INTERNAL CLEANING

Water in the compressed air, dust and wear particles cause rust and sticking of vanes, valves etc.
This can be solved by flushing with oil (some drops), running the machine for 5-10 seconds and absorbing the oil in a cloth.
Make this preparation before longer standstills.

OVERHAUL, LUBRICATION AND CHANGE OF OIL

The machine is normally used as a heavy-duty machine. It should, therefore, be dismantled, overhauled and cleaned after 100,000 (ambitious service level) to 250,000 (maximum) tightenings. If it is not running properly, it should be taken out of service for inspection.

Note: Check or change the O-ring around the anvil's shaft. Also carefully clean the O-ring's groove.

The strainer at the air inlet and the exhaust silencer should be cleaned frequently in order to prevent clogging, which decreases the capacity.
At the overhauls the throttle valve and bearings must be cleaned and lubricated with grease. Molykote BR2 Plus gives long intervals between lubrications.
If it is necessary to dismantle the vane motor, check the height and width of the vanes (measurements: see exploded view). The cylinder surface must be smooth and unscored.

Note: Clean the rotor and cylinder before changing vanes. Apply a thin layer of grease, containing molybdenumdisulphide (Molykote BR2 Plus), on to the end faces of rotor or end plates. Assemble the motor dry and check that it is running free. Add two drops of oil through the air inlet and turn the motor over so that oil is distributed over the internal motor parts.

THREADED CONNECTIONS

It is important that the machine's threaded connections are tightened properly; i.e. in accordance with the specifications on the exploded views.
Note: *Before assembly, lubricate the threads with grease.*

© Copyright 1999, Desoutter Limited. HP2 7DR. UK.
All rights reserved. Any unauthorized use or copying of the contents or part thereof is prohibited. This applies in particular to trademarks, model denominations, part numbers and drawings.
Use only authorized parts. Any damage or malfunction caused by the use of unauthorized parts is not covered by Warranty or Product Liability.