AirToolPro.com by Zampini Industrial Group - Premier Tool Suppliers Since 1987 1-800-353-4676

Desoutter™

Desoutter Limited. HP2 7DR. UK

RFDT-125

(GB) Servicing Instructions
Parts List
Operating Instructions

(D) Wartungsanleitung
Teileliste
Bedienungsanleitung

(F) Manuel d'entretien
Liste de pièces
Manuel d'utilisation

(E) Instrucciones de Servicio
Listas de Repuestos
Instrucciones de Operación

(P) Instruções de Manutenção
Listas de Peças
Instruções de Funcionamento

(I) Istruzioni per la Manutenzione
Elenco delle Parti
Istruzioni Operative

(GR) Οδηγίες Συντήρησης
Κατάλογοι Ανταλλαχτιχών
Οδηγίες Λειτουργιάς

(NL) Onderhoudsinstructies
Onderdelenlijst
Bedieningsinstructies

(DK) Servicevejledning
Liste over dele
Betjeningsvejledning

(N) Serviceinstruksjoner
Delelister
Driftsinstruksjoner

(S) Serviceinstruktioner
Reservdelslista
Bruksanvisning

(FIN) Huolto-ohjeet
Osaluettelo
Käyttöohjeet

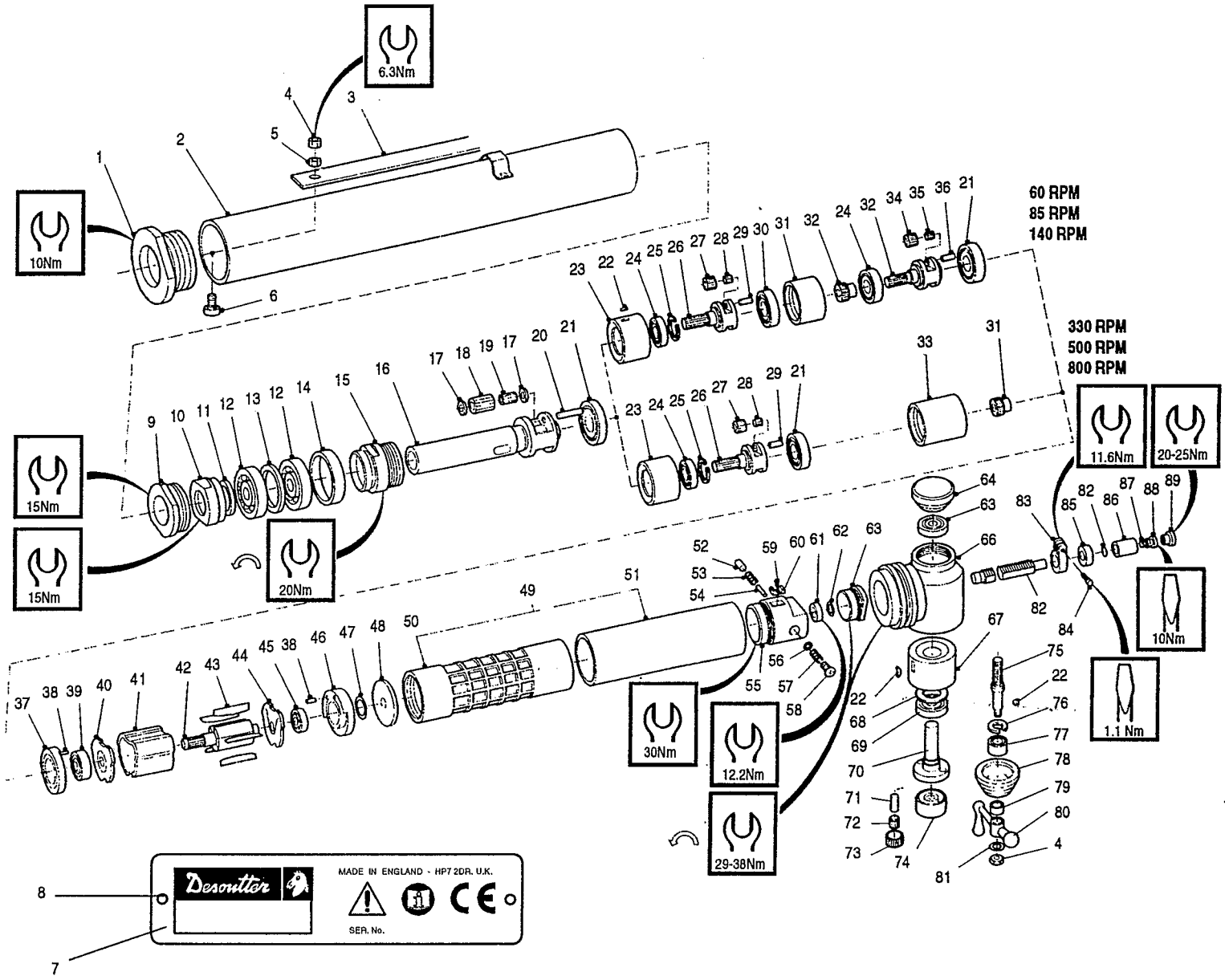

RFDT-125-60	1445524-D	RFDT-125-140	1445504-D	RFDT-125-500	1445664-D
RFDT-125-85	1445514-D	RFDT-125-330	1445674-D	RFDT-125-800	1445654-D

AirToolPro.com by Zampini Industrial Group - Premier Tool Suppliers Since 1987 1-800-353-4676

KPDT/125: Parts List / Teileliste / Liste de Pièces

Desoutter™

Desoutter Limited. HP2 7DR. UK

Item Ps. Nr. No. Article	Part No Teil Nr. Référence	Description Beschreibung Description	Qty Menge Qté
1	35323	Plate	1
2	33023	Case	1
3	33093	Bar	1
4	17602	Nut	2
5	32383	Washer	1
6	30483	Screw	1
7	363363	Nameplate	1
8	54853	Screw	2
9	349913	Nut	1
10	349903	Nut	1
11	349923	Washer	1
*12	349933	Bearing	2
13	349893	Spacer	1
14	299373	Silencer Felt	1
15	349883	Nose	1
16	349873	Cage	1
17	32943	Washer	4
18	25263	Wheel	2
*19	25963	Roller	20
20	32933	Pin	2
*21	1673	Bearing (330, 500)	2
	1673	Bearing (60, 85)	3
	1483	Bearing (140, 800)	12
22	25568	Key (60, 85, 140)	3
	25568	Key (330, 500, 800)	2
23	42533	Gear (60, 85)	1
	288073	Gear (140)	1
	5643	Gear (330, 800)	1
	5303	Gear (500)	1
*24	9608	Bearing (60, 85)	2
	9608	Bearing (140,330,500,800)	1
25	50713	Circlip (140, 800)	1
26	25773	Cage (60, 85, 330, 500)	1
	27413	Planet Cage (140, 800)	1
27	1353	Wheel (330)	2
	49703	Wheel (140, 800)	2
	80003	Wheel (85)	4
	80003	Wheel (60, 500)	2
*28	502103	Bearing (330, 500)	2
	502103	Bearing (60, 85)	4
	502093	Bearing (140, 800)	1
29	80013	Pin (60, 85)	4
	80013	Pin (330, 500)	2
	1453	Pin (140, 500)	2
30	5643	Gear (60)	1
	5303	Gear (85, 140)	1
31	49693	Pinion (140)	1
	273873	Pinion (800)	1
32	5653	Cage (60, 85)	1
	16413	Cage (140)	1
33	77933	Spacer (330, 500, 800)	1
34	1353	Wheel (60)	2
	80003	Wheel (140)	2
*35	502103	Bearing (140)	2
36	80013	Pin (140)	2
37	265063	Housing	1
38	288183	Pin	2
*39	80253	Bearing	1
40	265043	Plate	1
41	265033	Cylinder	1
42	318413	Rotor (60, 330)	1
	318393	Rotor (140, 800)	1
	318433	Rotor (85, 500)	1
*43	89163	Blade	5
44	265053	Plate	1
*45	500693	Bearing	1
46	265073	Housing	1
47	256773	Cap	1
48	275433	Restrictor	1
49	305043	Case	1
50	33133	Case	1
51	33143	Sleeve	1
52	30443	Valve	1
53	65863	Spring	1
54	31153	Valve	1
55	286333	Control Top	1
56	30463	Ball	1
57	32353	Spring	1
58	30453	Cap	1
59	238303	Screw	2
60	30713	Key	2
61	30513	Nut	1
*62	30533	O-Ring	2
63	30433	Cap	1
64	33893	Housing	1
*65	64358	Bearing	1
66	33283	Housing	1
67	33883	Gear Ring	1
68	33153	Circlip	1
*69	2413	Bearing	1
70	33913	Cage	1
71	33303	Pin	2
*72	33323	Bearing	2
73	33963	Wheel	2
*74	33963	Bearing	1
75	33903	Spindle	1
76	32929	Circlip	1
*77	64368	Bearing	1
78	33873	Housing	1
79	33953	Collar	1
80	30603	Handle	1
81	6512	Washer	1
82	33863	Tube	1
83	33923	Stop	1
84	31143	Screw	1
85	33013	Nut	1
86	31823	Connector	1
87	31833	Screw	
*88	99853	O-Ring	1
89	42953	Adaptor (1/4" BSP)	1
	47133	Adaptor (1/4" BSP)	1

GB * Indicates normal replacement items. It is recommended that adequate stocks are held for servicing requirements.
Always quote tool model number, serial number and spare part number when ordering spares.

D * Bedeutet normale Verschleißteile. Es empfiehlt sich eine angemessene Menge für Wartungszwecke auf Lager zu halten.
Bei der Bestullung von Ersatzteilen, bitte immer angeben: Typennummer der Bohrmaschine, Werknummer und Ersatzteilnummer.

F * Le symbole astérisque (*) indique des articles de rechange normaux. Il est recommandé d'en conserver des stocks suffisants pour assurer toutes les opérations d'entretien courant.
Lors de la commande de pièces de rechange, toujours citer le numéro de modèle de l'outillage, son numéro de série et le numéro de référence de chaque pièce de rechange.

E * Indica elementos de reposición regular. Se recomienda tener una cantidad adecuada de los mismos en reserva a efectos de mantenimiento.
Al encargar piezas de recambio, siempre debe indicarse el número de modelo de la herramienta, su número de serie y el número de la pieza de recambio.

P * Indica itens que são substituidos regularmente. É recomendado que estoques adequados sejam mantidos para requisitos de manutenção.
Cite sempre o número do modêlo da ferramenta, número de série, e número da peça accesória quando pedindo acessórios.

I * L'asterisco denota recambi normali. Si consiglia di mantenere scorte adeguate alle esigenze della manuterizione.
Nell'ordinazione di ricambi citare il numero di modello dell'utensile, il numero di matricola e quello di catalogo del pezzo.

GR * Σημαίνει συνηθισμένα είδη (τεμάχια) για αντικατάσταση. Σας συνιστύμε να τηρείτε αρκετό απόθεμα από τα είδη που χρειάζονται αντικατάσταση.
Οταν παραγγέλνετε ανταλλακτικά πάντα να γράφετε τον αιρθμό μοντέλου του εργαλείου, τον αριθμό σειράς και τον αριθμό ανταλλακτικού.

NL * Betekent normale reserveartikelen. Het verdient aanbeveling om voldoende voor onderhoudsbehoeften vooradig te hebben.
Bij bestelling van reserveonderdelen geef altijd modelnummer, volgnummer en reserveonderdeelnummer van het werktuig op.

DK * Indikerer normale udskiftningsemner. Det anbefales at have rigelige forsyninger af dele til brug i forbindelse med eftersyn.
Opgiv altid det korrekte værktøjsmodelnummer, serienummer og reservedelsnummer ved bestilling af reservedele.

N * Angir normale reservedeler. Det anbefales at tilstrekkelig antall reservedeler holdes på lager.
Ved bestilling av deler må man alltid oppgi verktøyets modellnr., serienr. og reservedelens nr.

S * Utmärker normala reservdelar. Vi rekommenderar att tillräckligt antal lagras för serviceändamål.
Uppge alltid verktygets modellnummer, serienummer samt reservdelens nummer vid beställtning av reservdelar.

FIN * Viittaa tavallisiin varaosiin. Suosittelemme, että riittäviä määriä pidetään varastossa huoltotarpeita varten.
Työkalun mallinumero, sarjanumero ja varasosan numero on aina mainittava tilattaessa.

AirToolPro.com by Zampini Industrial Group - Premier Tool Suppliers Since 1987 1-800-353-4676

Desoutter™

Desoutter Limited. HP2 7DR. UK

RFDT-100

- (GB) Servicing Instructions
  Parts List
  Operating Instructions
- (D) Wartungsanleitung
  Teileliste
  Bedienungsanleitung
- (F) Manuel d'entretien
  Liste de pièces
  Manuel d'utilisation
- (E) Instrucciones de Servicio
  Listas de Repuestos
  Instrucciones de Operación
- (P) Instruções de Manutenção
  Listas de Peças
  Instruções de Funcionamento
- (I) Istruzioni per la Manutenzione
  Elenco delle Parti
  Istruzioni Operative
- (GR) Οδηγίες Συντήρησης
  Κατάλογοι Ανταλλαχτικών
  Οδηγίες Λειτουργιάς
- (NL) Onderhoudsinstructies
  Onderdelenlijst
  Bedieningsinstructies
- (DK) Servicevejledning
  Liste over dele
  Betjeningsvejledning
- (N) Serviceinstruksjoner
  Delelister
  Driftsinstruksjoner
- (S) Serviceinstruktioner
  Reservdelslista
  Bruksanvisning
- (FIN) Huolto-ohjeet
  Osaluettelo
  Käyttöohjeet

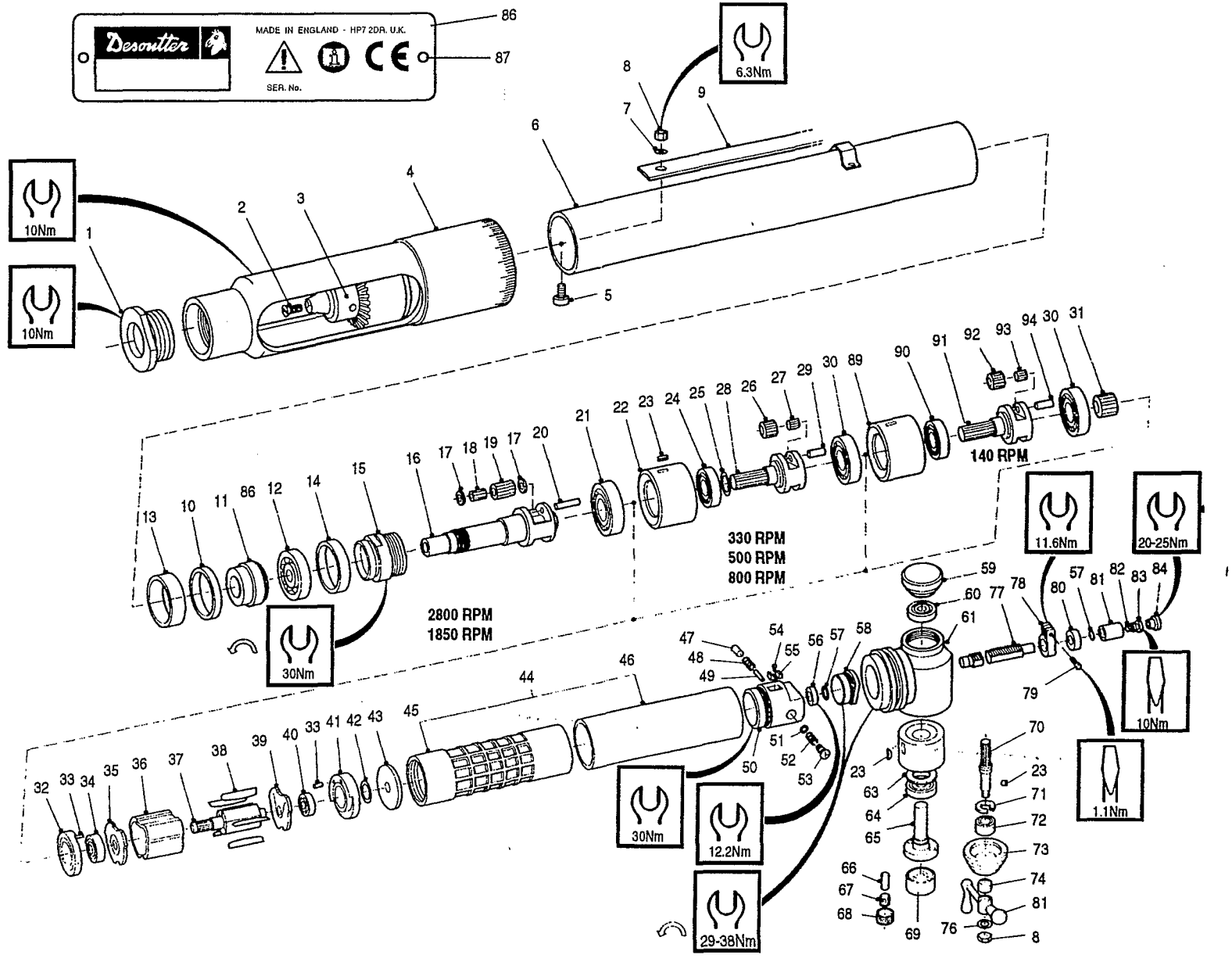

RFD-100-2800	681214-D	RFD-100-800	680084-D	RFD-100-330	680244-D	RFD-100-85	1457374-D
RFD-100-1850	681394-D	RFD-100-500	680164-D	RFD-100-140	1457364-D	RFD-100-60	1457384-D

AirToolPro.com by Zampini Industrial Group - Premier Tool Suppliers Since 1987 1-800-353-4676

RFD/100: Parts List / Teileliste / Liste de Pieces

Desoutter™

Desoutter Limited. HP2 7DR. UK

Item Ps. Nr. No. Article	Part No Teil Nr. Référence	Description Beschreibung Description	Qty Menge Qté
1	251063	Plate	1
2	64888	Screw (330)	1
3	29122	Chuck (330, 500, 800, 140)	1
	29142	Chuck (2800, 1850)	1
4	251043	Nose	1
5	30483	Screw	1
6	32433	Case	1
7	32383	Washer	1
8	17602	Nut	2
9	33093	Bar	1
10	31633	Spacer (1850)	1
11	26593	Nut (330, 500, 800, 140)	1
	75503	Nut (2800, 1850)	1
*12	25863	Bearing (330, 500, 800, 140)	1
13	299383	Ring (330, 500, 800, 140)	1
14	299373	Felt (330, 500, 800, 140)	1
	75483	Felt (1850)	1
15	237413	Nose (330, 500, 800, 140)	1
	35143	Nose (2800)	1
	8883	Nose (1850)	1
16	26583	Cage (330, 500, 800, 140)	1
	1033	Cage (2800, 1850)	1
17	26233	Washer (330, 500, 800, 140)	1
18	25263	Wheel (330, 500, 800, 140)	2
19	25963	Roller (330, 500, 800, 140)	20
20	25953	Pin (330, 500, 800, 140)	2
*21	1673	Bearing	2
	1483	Bearing (800, 140)	1
22	5643	Gear (800, 330)	1
	5303	Gear (500, 140)	1
23	25568	Key	2
*24	9608	Bearing	1
25	50713	Circlip (800, 140)	1
26	49703	Wheel (800, 140)	2
	80003	Wheel (500, 2800)	2
	1353	Wheel 330, 1850)	2
27	25773	Cage (500, 330)	1
	27413	Cage (800, 140	1
*28	502103	Bearing (140)	2
29	1453	Pin (800, 140)	2
	80013	Pin (500, 330, 2800)	2
*30	502093	Bearing (800, 140)	2
	502103	Bearing (500, 330, 2800)	2
31	273873	Pinion (800)	1
	49693	Pinion (140)	1
32	265063	Housing	1
33	288183	Pin	1
*34	80253	Bearing	1
35	265043	Plate	1
36	265033	Cylinder	1
37	318413	Rotor (1850, 330)	1
	318433	Rotor (2800, 500, 140)	1
	318393	Rotor (800)	1

Item Ps. Nr. No. Article	Part No Teil Nr. Référence	Description Beschreibung Description	Qty Menge Qté
*38	89163	Blade	5
39	265053	Plate	1
*40	500693	Bearing	1
41	265073	Housing	1
42	265773	Cap	1
43	275433	Restrictor	1
44	304933	Case, cpte. (2800, 1850, 500, 330)	1
	305043	Case, cpte. (140)	1
45	30193	Case	1
46	30693	Sleeve	1
47	30443	Button	1
48	85868	Spring	1
49	31153	Spindle	1
50	286333	Control Top	1
51	30463	Ball	1
52	32353	Spring	1
53	30453	Cap	1
54	238303	Screw	2
55	30713	Key	2
56	30513	Nut	1
*57	30533	O-Ring	2
58	30433	Cap	1
59	33893	Housing	1
*60	64358	Bearing	1
61	33283	Housing	1
62	33883	Gear Ring	1
63	33153	Circlip	1
64	2413	Bearing	1
65	33914	Cage	1
66	33303	Pin	2
*67	33323	Bearing	2
68	33963	Wheel	2
*69	33993	Bearing	1
70	33903	Spindle	1
71	32923	Circlip	1
*72	64368	Bearing	1
73	33873	Housing	1
74	33953	Collar	1
75	30603	Handle	1
76	6512	Washer	1
77	33863	Tube	1
78	33923	Stop	1
79	31143	Screw	1
80	455623	Nut	1
81	311823	Connector	1
82	31833	Screw	1
*83	99853	O-Ring	1
84	42953	Adaptor BSP	1
85	47133	Adaptor NPT	1
86	363363	Nameplate	1
87	54853	Screw	2
88	25843	Washer (330, 500, 800, 140)	1
89	288073	Gear Ring (140)	1
*90	1673	Bearing (140)	1
91	16413	Cage (140)	1
92	80003	Wheel (140)	2
*93	502103	Bearing (140)	2
94	80013	Pin (140)	2

GB * Indicates normal replacement items. It is recommended that adequate stocks are held for servicing requirements.
Always quote tool model number, serial number and spare part number when ordering spares.

D * Bedeutet normale Verschleißteile. Es empfiehlt sich eine angemessene Menge für Wartungszwecke auf Lager zu halten.
Bei der Bestullung von Ersatzteilen, bitte immer angeben: Typennummer der Bohrmaschine, Werknummer und Ersatzteilnummer.

F * Le symbole astérisque (*) indique des articles de rechange normaux. Il est recommandé d'en conserver des stocks suffisants pour assurer toutes les opérations d'entretien courant.
Lors de la commande de pièces de rechange, toujours citer le numéro de modèle de l'outillage, son numéro de série et le numéro de référence de chaque pièce de rechange.

E * Indica elementos de reposición regular. Se recomienda tener una cantidad adecuada de los mismos en reserva a efectos de mantenimiento.
Al encargar piezas de recambio, siempre debe indicarse el número de modelo de la herramienta, su número de serie y el número de la pieza de recambio.

P * Indica itens que são substituidos regularmente. É recomendado que estoques adequados sejam mantidos para requisitos de manutenção.
Cite sempre o número do modêlo da ferramenta, número de série, e número da peça accesória quando pedindo acessórios.

I * L'asterisco denota recambi normali. Si consiglia di mantenere scorte adeguate alle esigenze della manutenzione.
Nell'ordinazione di ricambi citare il numero di modello dell'utensile, il numero di matricola e quello di catalogo del pezzo.

GR * Σημαίνει συνηθισμένα είδη (τεμάχια) για αντικατάσταση. Σας συνιστύμε να τηρείτε αρκετό απόθεμα από τα είδη που χρειάζονται αντικατάσταση.
Οταν παραγγέλνετε ανταλλακτικά πάντα να γράφετε τον αιρθμό μοντέλου του εργαλείου, τον αριθμό σειράς και τον αριθμό ανταλλακτικού.

NL * Betekent normale reserveartikelen. Het verdient aanbeveling om voldoende voor onderhoudsbehoeften vooradig te hebben.
Bij bestelling van reserveonderdelen geef altijd modelnummer, volgnummer en reserveonderdeelnummer van het werktuig op.

DK * Indikerer normale udskiftningsemner. Det anbefales at have rigelige forsyninger af dele til brug i forbindelse med eftersyn.
Opgiv altid det korrekte værktøjsmodelnummer, serienummer og reservedelsnummer ved bestilling af reservedele.

N * Angir normale reservedeler. Det anbefales at tilstrekkelig antall reservedeler holdes på lager.
Ved bestilling av deler må man alltid oppgi verktøyets modellnr., serienr. og reservedelens nr.

S * Utmärker normala reservdelar. Vi rekommenderar att tillräckligt antal lagras för serviceändamål.
Uppge alltid verktygets modellnummer, serienummer samt reservdelens nummer vid beställtning av reservdelar.

FIN * Viittaa tavallisiin varaosiin. Suosittelemme, että riittäviä määriä pidetään varastossa huoltotarpeita varten.
Työkalun mallinumero, sarjanumero ja varasosan numero on aina mainittava tilattaessa.

AirToolPro.com by Zampini Industrial Group - Premier Tool Suppliers Since 1987 1-800-353-4676

Desoutter™

Desoutter Limited. HP2 7DR. UK

STATEMENT OF USE

Product is designed for the installing and removing of threaded fasteners in wood, metal and plastics. No other use permitted.

AIR SUPPLY

A water free and filtered air supply is required, at a pressure of 6.3 bar (91.4 psig), with a flow rate of 9.9 l/s (21cu.ft/min) controlled by a pressure regulator selected from the Desoutter Air Line Service Equipment Catalogue.

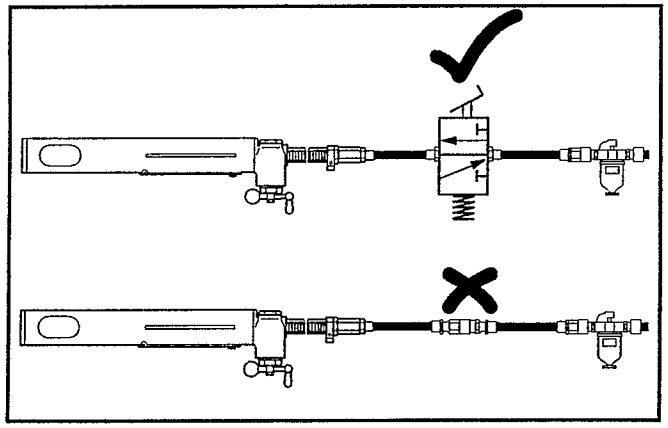

LUBRICATION

Correct lubrication is vital for the maximum performance of the tool and an air line lubricator selected from the Desoutter Air Line Service Equipment Catalogue should be fitted into the system down stream of the filter.
Desoutter recommend the use of an ISO Viscosity Classified oil, grade number ISO VG 15, in the lubricator.

DATA

Maximum air pressure Pmax	= 6.3 bar
Sound Pressure Level (dBA)	= 90 ± 2 re.CAGI-PNEUROP Test code
Vibration Level (m/sec²)	= <2.5 re ISO 8662-1
Weight	= 7.5kg.
Sound Power Level (dBA)	= 101 ± 2 re.(ISO 3744)

These declared values were obtained by laboratory type testing in compliance with the stated standards and are not adequate for use in risk assessments. Values measured in individual work places may be higher than the declared values. The actual exposure values and risk of harm experienced by an individual user are unique and depend upon the way the user works, the workpiece and the workstation design, as well as upon the exposure time and the physical condition of the user.

We,Desoutter, cannot be held liable for the consequences of using the declared values, instead of values reflecting the actual exposure, in an individual risk assessment in a work place situation over which we have no control.

ACCESSORIES

A range of Extension Tubes, Noses and Drill Bushes, Suspension Shackle, Mist Coolant Attachment, Micrometer Depth Control and Pistol Grip are available. Full details can be obtained from Desouter Ltd.

⚠ WARNING

(1) ALWAYS DISCONNECT THE TOOL FROM THE AIR SUPPLY BEFORE ATTEMPTING ANY REPLACEMENT, ADJUSTING, SERVICING OR DISMANTLING.

(2) ENSURE THAT NO LOOSE ARTICLES OF CLOTHING, LOOSE HAIR OR CLEANING MATERIAL CAN BE CAUGHT BY THE MOVING PARTS OF THE TOOL.

(3) ALWAYS ALLOW THE TOOL TO STOP BEFORE REMOVING THE WORK.

(4) ENSURE THAT THE WORK PIECE IS SECURELY CLAMPED BEFORE COMMENCEMENT OF OPERATION.

(5) EYE AND EAR PROTECTION MUST BE WORN WHEN OPERATING THE TOOL.

(6) DO NOT OPERATE THE TOOL IN EXPLOSIVE ATMOSPHERES.

(7) WHEN MACHINING HAZARDOUS MATERIALS, PROVISION MUST BE MADE FOR DUST COLLECTION OR SUPPRESSION.

(8) POWER TOOLS ARE NOT INSULATED AGAINST COMING INTO CONTACT WITH ELECTRIC POWER.

OPERATING INSTRUCTIONS

With the tool mounted for the drilling operation and all the adjustments set for the application :-
Rotate the feed handle to advance the drill bit on to the work piece, the motor will progressively start and be running at full speed after the tool has advanced 3.175mm (0.125in).

When the drill bit contacts the work piece the **operator must consistently rotate the feed handle to obtain the ideal feed rate for the material being machined.**

Should the tool start to slow during the drilling operation the operator should reduce the feed rate and in extreme cases partially retract and then, readvance.

INITIAL SETTING

When received the tool will have the drill depth set to a maximum. It is recommended that a trial drilling is carried out to determine the amount of adjustment required.

SERVICING REQUIREMENTS

General Notes

Oil	-	ISO Viscosity Classified Oil - ISO VG 15, for motors.
Grease	-	BP FGOO EP, for bearings.
Grease	-	Duckams Type Q5618, for gears and bearings.
Grease	-	Locol M204 G, for splines and pinions.

Cleaning
Required: 1. Container to immerse components
2. Good quality clean paraffin

MAINTENANCE INSTRUCTIONS

It is recommended that the tool is serviced at 1000 hrs. running time.

Dismantle the tool using the exploded view. Clean all components and inspect for wear or damage, exchange if necessary. Apply new lubricant to the relevant parts in accordance with list. Assemble the tool using the exploded view.

Torque values given are ± 5%.

Special tools shown in exploded view are in addition to normal workshop tools.

Note: Protective gloves and eye protection should be worn during cleaning of parts. Eating or smoking is prohibited when cleaning, dismantling or assembling tool.
Worn components should be carefully handled and disposed of safely.

©Copyright 1998, Desoutter, HP2 7DR UK.
All rights reserved.Any unauthorized use or copying of the contents or part thereof is prohibited. This applies in particular to trademarks, model denominations, part numbers and drawings.
Use only authorized parts. Any damage or malfunction caused by the use of unauthorized parts is not covered by Warranty or Product Liability.